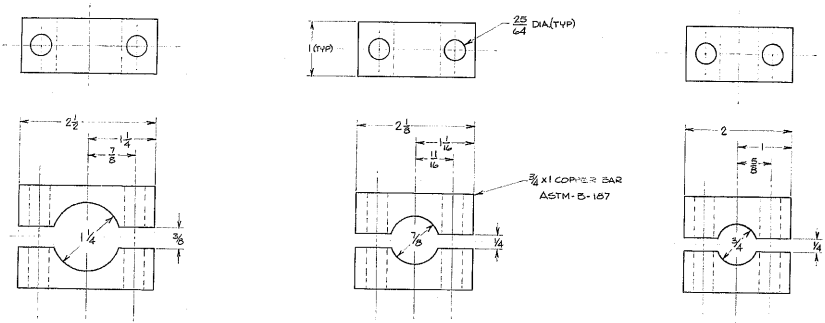

LET.	REVISION	ECR	DATE	BY

KITT PEAK NATIONAL OBSERVATORY

OPERATED BY THE
ASSOCIATION OF UNIVERSITIES FOR RESEARCH IN ASTRONOMY, INC.
UNDER CONTRACT WITH
NATIONAL SCIENCE FOUNDATION

NAME: 4 METER ALUM CHAMBER – MOD
DETAIL – CONNECTOR CLAMPS
FILAMENT BUSSES

REF. FILE 8384

PRINT ISSUED	SCALE	NEXT ASSEMBLY	DESIGNED BY	DATE	APPROVED BY	DATE	DRAWING NUMBER	REV
		D10393P41	DRAWN BY VR	DATE 2/10/65	APPROVED BY	DATE	2107.925-C4	
			CHECKED BY	DATE	APPROVED BY	DATE		