NOTES: UNLESS OTHERWISE SPECIFIED
1. REMOVE ALL BURRS AND SHARP EDGES .03.
2. MACHINED SURFACE ROUGHNESS 125 ✓

REVISIONS						
ZONE	LTR	REVISIONS	ECR	DATE	BY	APRV

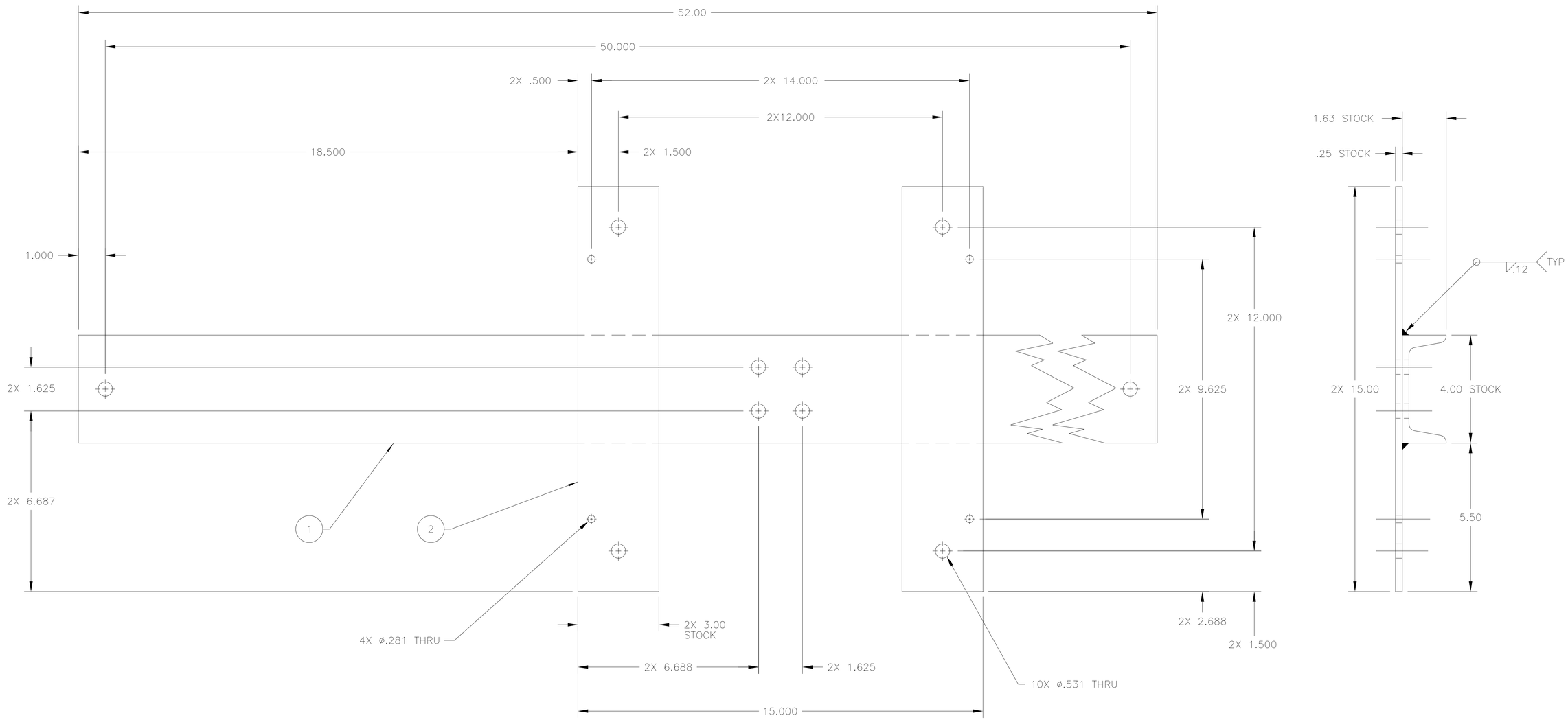

QTY REQD	PART OR IDENTIFYING NO	DESCRIPTION	MATERIAL/SPECIFICATION	ZONE	ITEM NO
2		PLATE, .25 X 3.00 X 15.00 STL		B5	2
1		CHANNEL, 1.63 X 4 X 52 STL		B5	1

TOLERANCES UNLESS OTHERWISE NOTED
DECIMALS .XX ± .03 .XXX ± .010
FRACTIONS ± 1/32
ANGULAR ± 0°30'

NATIONAL OPTICAL ASTRONOMY OBSERVATORIES
OPERATED BY THE
ASSOCIATION OF UNIVERSITIES FOR RESEARCH IN ASTRONOMY
UNDER COOPERATIVE AGREEMENT WITH
NATIONAL SCIENCE FOUNDATION

NEXT ASSEMBLY: E10393P-31

NAME: CENTER ARRAY FILAMENT FRAME

REF FILE: 8384

USED ON

SCALE: 1/2	DESIGNED BY	DATE	APPROVED BY	DATE	DWG NO	REV
PRINT ISSUED	DRAWN BY A.J.GERZOFF	DATE 93-11-15	APPROVED BY	DATE	2107.0006157D	
	CHECKED BY	DATE	APPROVED BY	DATE	RELEASED	SHEET 1 OF 1