BILL OF MATERIAL

ITEM	QTY.	MATERIAL	DESCRIPTION	WEIGHT
92	1	2150-580-C024	VACUUM SEAL	
93	1	# SAVA-747	SAVA IND LOOP/SLEEVE	
94	AR	# 2036-SN	SAVA IND NYLON COATED CABLE	
95	1	2150-580-D021	GEAR COVER-CELL & SUPPORT ASSY	
96	3	10-32 x 1 1/2	SOC HD CAP SCR	
97	3	98-904	SHARP LUC PRODUCTS KNOB	

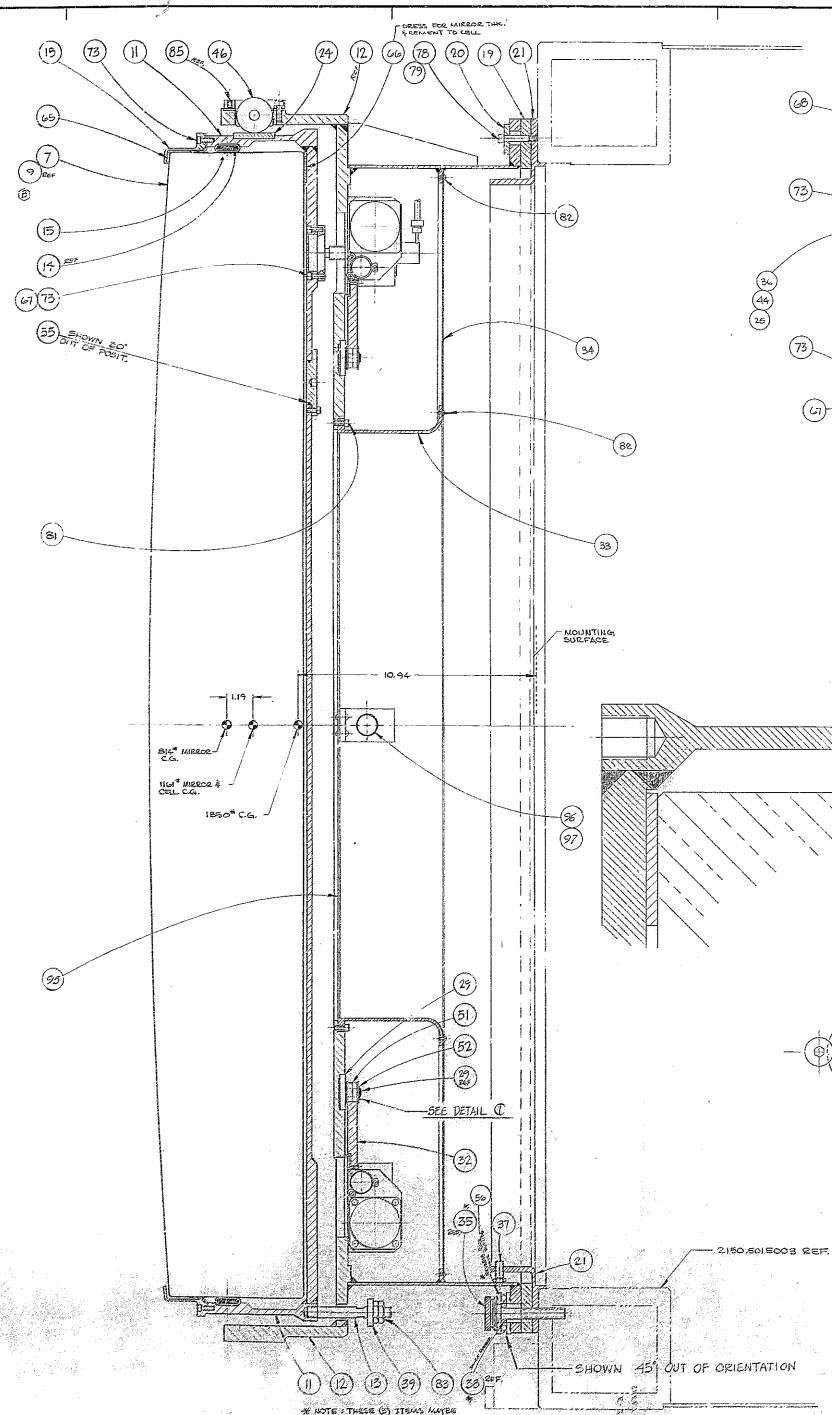

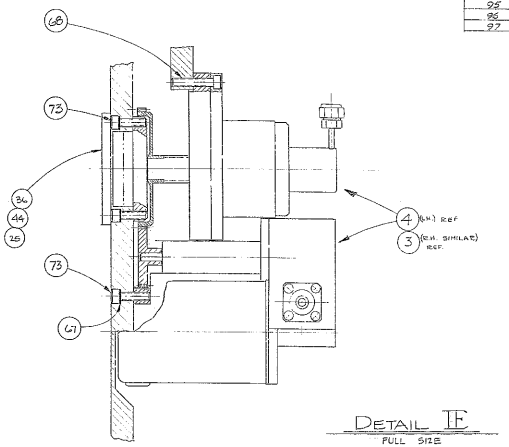

DETAIL E
FULL SIZE

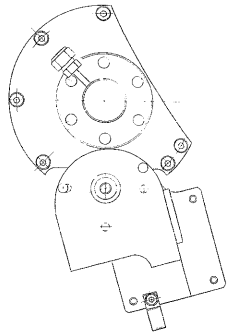

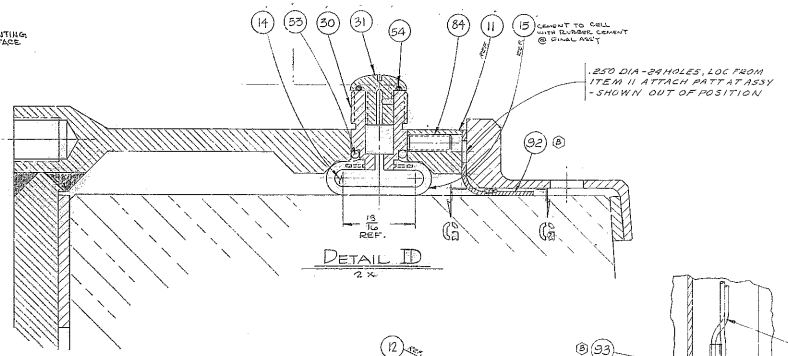

DETAIL D
2 X

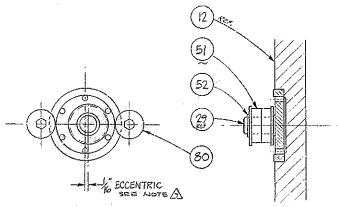

DETAIL C
FULL SCALE

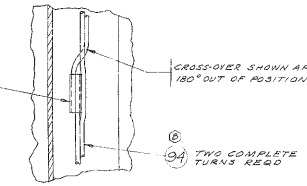

B VIEW
TWICE SIZE

1198

FOR ASSEMBLY SEE 2150.501E002

LET.	REVISION	BY	DATE	BY
C	ADDED ITEMS 95,96 & 97	BJS	10-31-78	WL
B	REDID 6-6, ITEMS 42,43,94 CHGD VIEWS TO AGREE	BJS	7-29-77	WL
	DELETED ITEM 16			
A	REVISED PER AREA REQ.		3-15-76	WL

TOLERANCES UNLESS OTHERWISE NOTED
DECIMAL DIMENSIONS ±.005 ANGLES ±.5°
FRACTIONAL DIMENSIONS UP TO 12" ± 1/64 UP TO 60" ± 1/32 60" & OVER ± 1/16
BREAK SHARP EDGES
ALL SURFACES TO HAVE ▽ FINISH UNLESS OTHERWISE NOTED

KITT PEAK NATIONAL OBSERVATORY
OPERATED BY THE ASSOCIATION OF UNIVERSITIES FOR RESEARCH IN ASTRONOMY, INC. UNDER CONTRACT WITH NATIONAL SCIENCE FOUNDATION

150" STELLAR TELESCOPE

NAME: X-8 MIRROR CELL & SUPPORT ASS'Y; SEC. MIRROR & PRIME FOCUS ASS'Y

SCALE: 1/2 & NOTED
PRINT ISSUED

DRAWN BY: JD 12-12-74 | CHECKED BY: 10-29-74 | APPROVED BY: DATE
DRAWING NUMBER: 2150.580-E002
REV. D

BOILER & CHIVENS DATA: JOB 58070 N/A E 30248 E-30953
SHEET 3 OF 3