NOTES: UNLESS OTHERWISE NOTED
1. REMOVE ALL BURRS AND SHARP EDGES .01
2. MACHINED SURFACE ROUGHNESS 125
3. MATL: ALUM ALLOY 2024-T3
4. FINISH: PAINT FLAT BLACK

REVISIONS						
ZONE	LTR	DESCRIPTION	ECR	DATE	BY	APVD

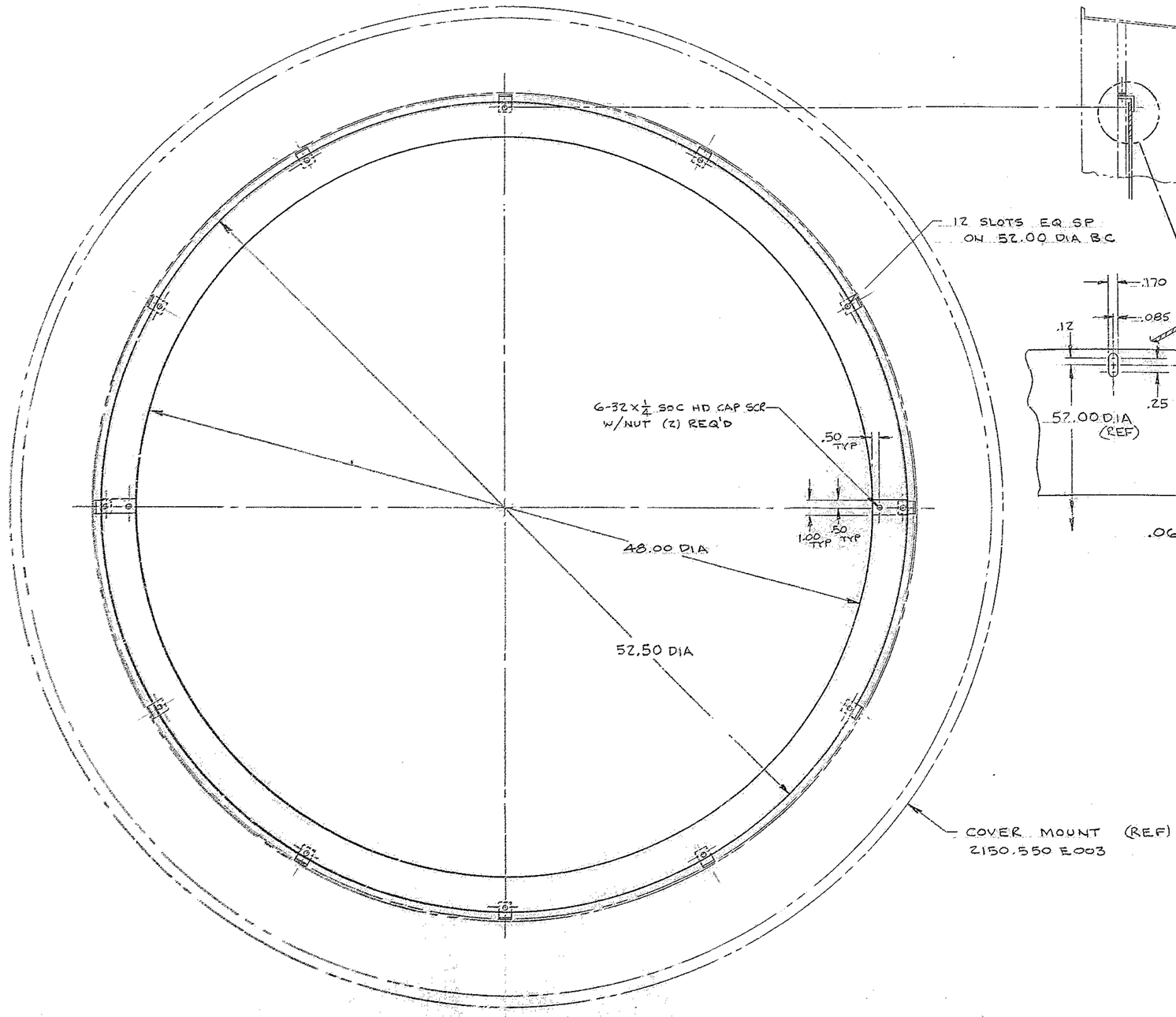

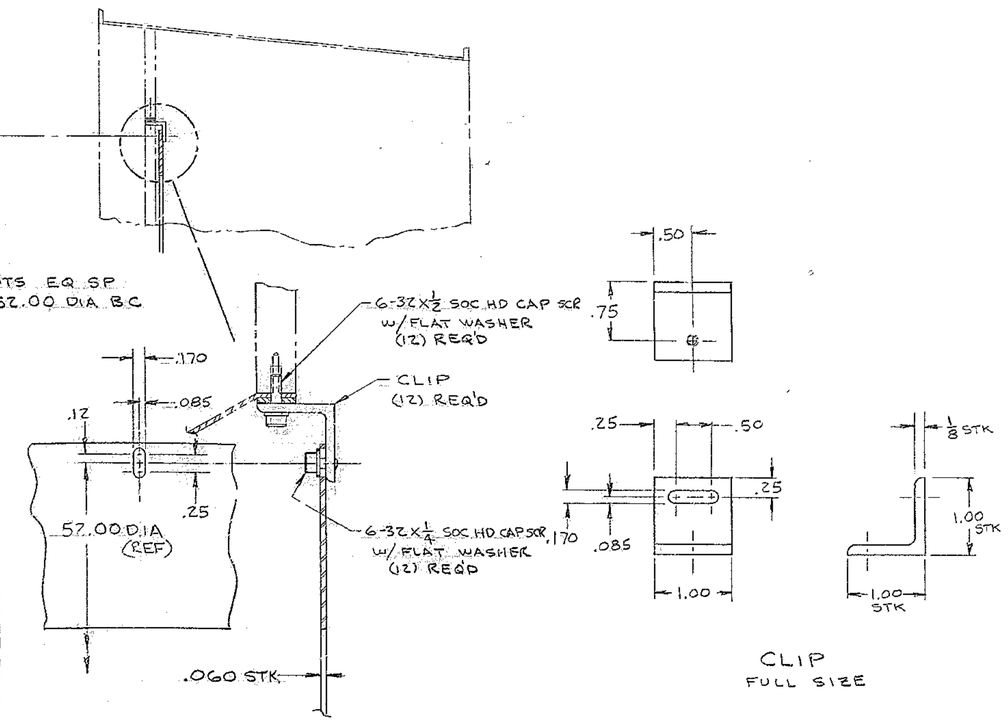

CLIP
FULL SIZE

DETAILS
FULL SIZE

QTY REQD	PART OR IDENTIFYING NO.	DESCRIPTION	MATERIAL/SPECIFICATION	ZONE	ITEM NO.

PARTS LIST

TOLERANCES
UNLESS OTHERWISE NOTED
DECIMALS: .XX ± .03, .XXX ± .010
FRACTIONS: ± —
ANGULAR: ± 0° 30'

NEXT ASSEMBLY: 2150.550-E102

KITT PEAK NATIONAL OBSERVATORY
OPERATED BY THE
ASSOCIATION OF UNIVERSITIES FOR RESEARCH IN ASTRONOMY, INC.
UNDER CONTRACT WITH
NATIONAL SCIENCE FOUNDATION

NAME: MIRROR BAFFLE - f8 SECONDARY, 4-M TELESCOPE
REF FILE: 1195
DWG CL:

SCALE: 1/4 & NOTED
PRINT ISSUED

DESIGNED BY	DATE	APPROVED BY	DATE 3-21-78
DRAWN BY J.C. MOSEY	DATE 3-21-78	APPROVED BY	DATE
CHECKED BY	DATE	APPROVED BY	DATE

DWG NO. 2150.550-D006
REV
RELEASE DATE 3-5-79
FEB 3-5-79

4/75 DIETERICH-POST CLEARPRINT 1020