BILL OF MATERIAL					
ITEM	DWG. NO.	QTY.	MATERIAL	DESCRIPTION	WEIGHT

SIZES OF MATERIAL NOTED DO NOT INCLUDE STOCK ALLOWANCE FOR MACHINING AND CUTTING OFF EXCEPT AS NOTED. THE SIZE SPECIFIES THE MATERIAL REQUIRED FOR ONE PIECE ONLY. QUANTITIES NOTED ARE THE TOTAL NUMBER REQUIRED.

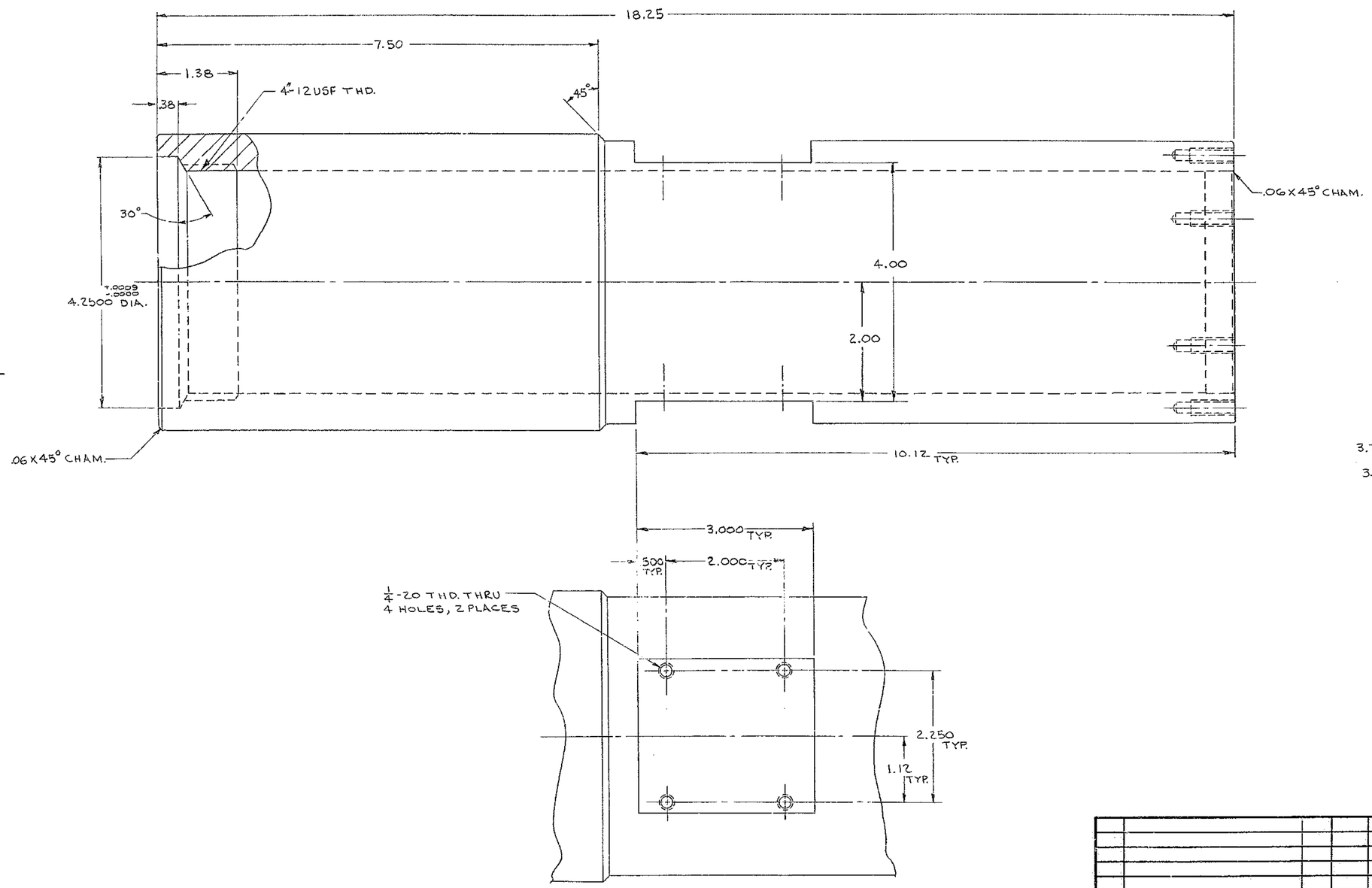

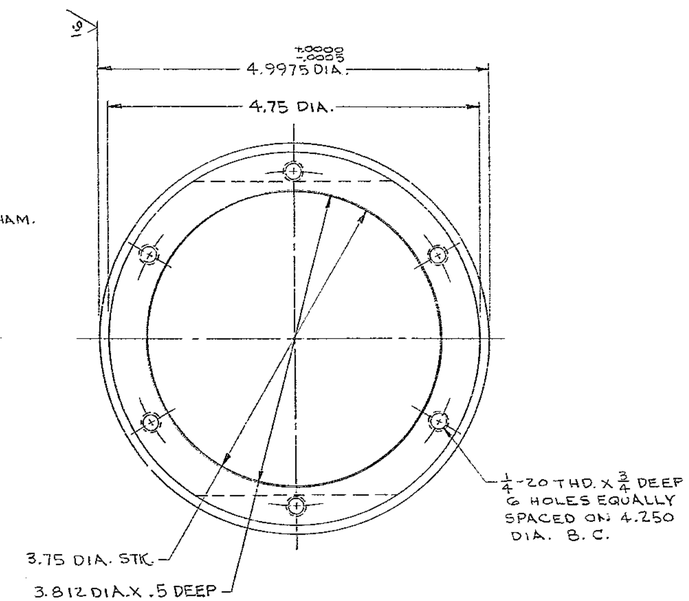

MATERIAL: AISI-MT-1015 ROUND SEAMLESS STEEL TUBING

FINISH: FLASH CHROME

FOR ASSEMBLY SEE 2150.530 E 302

QUANT.	PRINT RECORD	DATE	NO.	REVISION	ECR	DATE	BY
			A	AS BUILT CHANGE	0592	12/21/70	

TOLERANCES UNLESS OTHERWISE NOTED
DECIMAL DIMENSIONS 00.00 ±.010 00.000 ±.003
FRACTIONAL DIMENSIONS UP TO 18" ±1/64 18" TO 50" ±1/32 50" & OVER ±1/16
BREAK SHARP EDGES 1/32
ALL SURFACES TO HAVE 125 FINISH UNLESS OTHERWISE NOTED.

KITT PEAK NATIONAL OBSERVATORY
OPERATED BY THE
ASSOCIATION OF UNIVERSITIES FOR RESEARCH IN ASTRONOMY, INC.
UNDER CONTRACT WITH
NATIONAL SCIENCE FOUNDATION

150 INCH STELLAR TELESCOPE — REF. FILE 1193

NAME: DRAW TUBE, PIN - SECONDARY FLIP LOCK ASSY — SCALE FULL — PRINT ISSUED

DESIGNED BY	DATE	APPROVED BY	DATE	DRAWING NUMBER	REV.
	6-11-70		8-19-70	2150.530D 324	A
DRAWN BY	DATE 5-4-70	APPROVED BY	DATE 8-13-70		
CHECKED BY	DATE 5-26-70	APPROVED BY	DATE 8-13-70		

7/65 DIETERICH-POST CLEARPRINT 1020