REVISIONS				
ZONE	LTR	DESCRIPTION	DATE	APPROVED
	A	INITIAL RELEASE	9-DEC-69	[illegible]

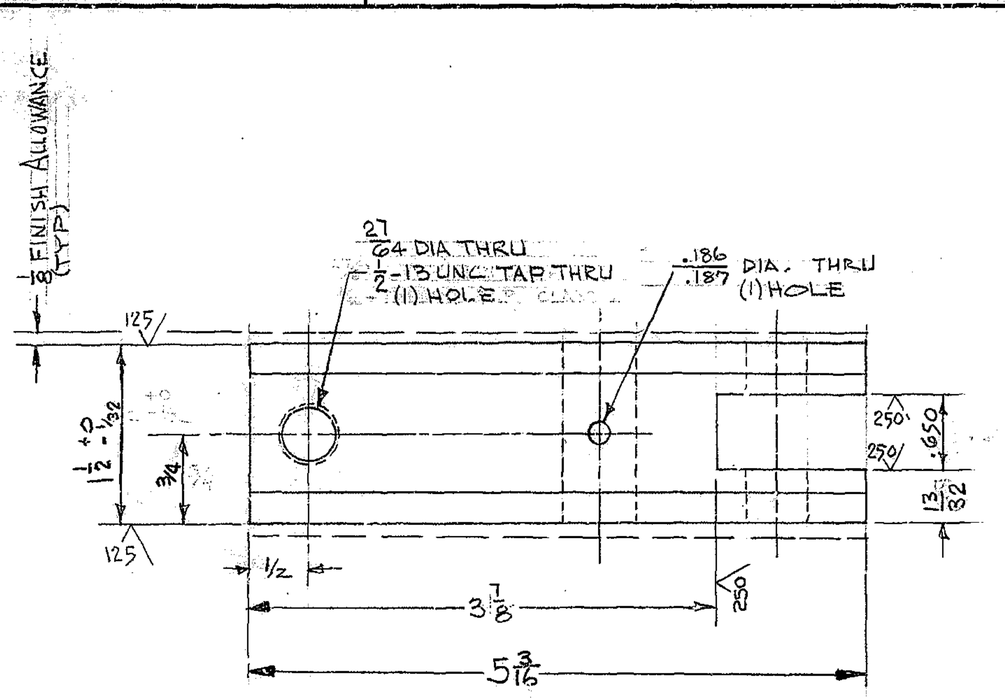

NOTES:
1. APPLY ONE COAT OF PRIME PAINT IMMEDIATELY AFTER CLEANING PER WGC SPEC No. 511.

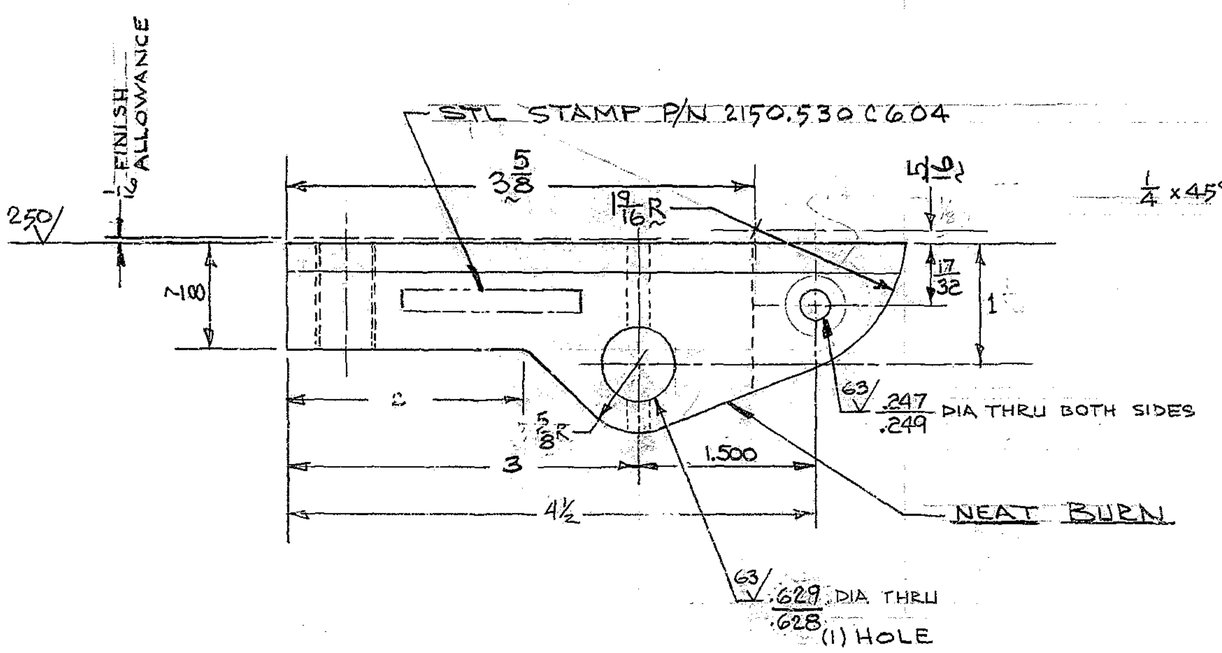

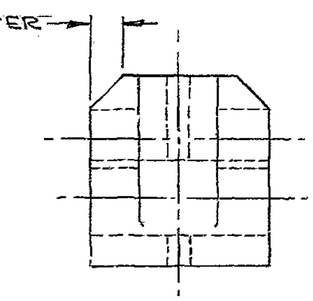

INT FILE 1193

NEXT ASSY: 2150.530D602 (WGD300290)

FIND NO.	PART NO.	DESCRIPTION	QTY	MATERIAL	CODE IDENT

LIST OF MATERIAL (LM)

LIMITS ON MACHINED DIMENSIONS EXCEPT AS NOTED
ANGULAR = ± 1° 0'
LINEAR:
.X = ± .1 .XXX = ± .010
.XX = ± .03 FRACTIONAL = ± 1/32
BREAK ALL SHARP EDGES
MATERIAL STEEL ASTM A-36 1 3/4 x 2 x 5 3/8

150" STELLAR TELESCOPE MOUNTING

DRAWN	J. BARTLESON	5/7/69
CHECK	[illegible]	29/SEP/69
ENGR		

WGC 300286
APPROVED

Western GEAR CORPORATION
HEAVY MACHINERY DIVISION
EVERETT, WASHINGTON

PIVOT BLOCK
LIMIT SWITCH ASSY

SIZE	CODE IDENT NO.		REV
C	16603	2150.530C604	A

SCALE FULL | WT 4 LB | SHEET 1 OF 1

WESTERN GEAR CORPORATION
CONSTRUCTION PROJECTS DEPARTMENT
APPROVED FOR PROCUREMENT
[illegible] DATE 12/8/69

P1336