BILL OF MATERIAL

ITEM	QTY.	MATERIAL	DESCRIPTION	WEIGHT

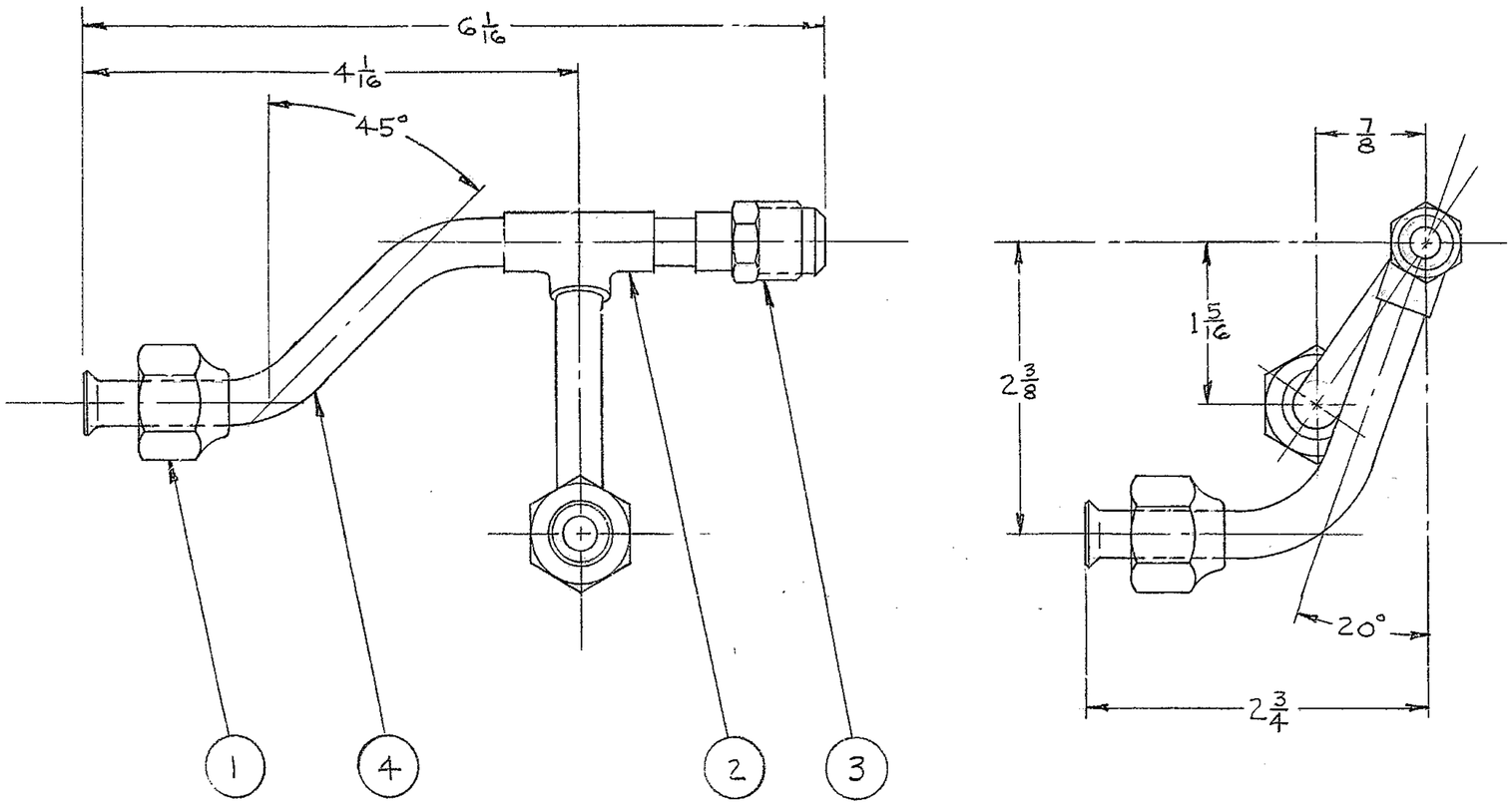

6. FOR B/M SEE 2150.530-A338

5- ALL BEND RADII 15/16

4-IDENTIFY BY _____ AT LOCATION 4 , "AURA INC. MADE IN U.S.A."

3-STAMP MATCH MARKS ON ALL MATING PARTS WHERE NECESSARY.

2-PROJECT DRAWINGS _____

1-FOR NEXT ASSY. SEE 2150.530-E302

NOTES-

LET.	REVISION	ECR	DATE	BY

TOLERANCES UNLESS OTHERWISE NOTED

DECIMAL DIMENSIONS
00.00 ± .010
00.000 ± .003

FRACTIONAL DIMENSIONS
UP TO 18" ± 1/64
18" TO 50" ± 1/32
50" & OVER ± 1/16

BREAK SHARP EDGES

ALL SURFACES TO HAVE 125 √ FINISH UNLESS OTHERWISE NOTED.

KITT PEAK NATIONAL OBSERVATORY

OPERATED BY THE
ASSOCIATION OF UNIVERSITIES FOR RESEARCH IN ASTRONOMY, INC.
UNDER CONTRACT WITH
NATIONAL SCIENCE FOUNDATION

150 INCH STELLAR TELESCOPE

REF. FILE 1193

NAME PIN UNLOCKING MANIFOLD-SECONDARY FLIP LOCK ASSY.

SCALE FULL

PRINT ISSUED

DESIGNED BY	DATE	APPROVED BY	DATE
L.B. Henry	2-11-71	A A A	3-11-71
DRAWN BY L.B. Henry	DATE 3-10-71	APPROVED BY	DATE
CHECKED BY J.G. Bowen	DATE 4-2-71	APPROVED BY	DATE 3-11-71

DRAWING NUMBER 2150.530-C338

REV.

2/70 DIETERICH-POST CLEARPRINT 1020