BILL OF MATERIAL

ITEM	QTY.	MATERIAL	DESCRIPTION	WEIGHT

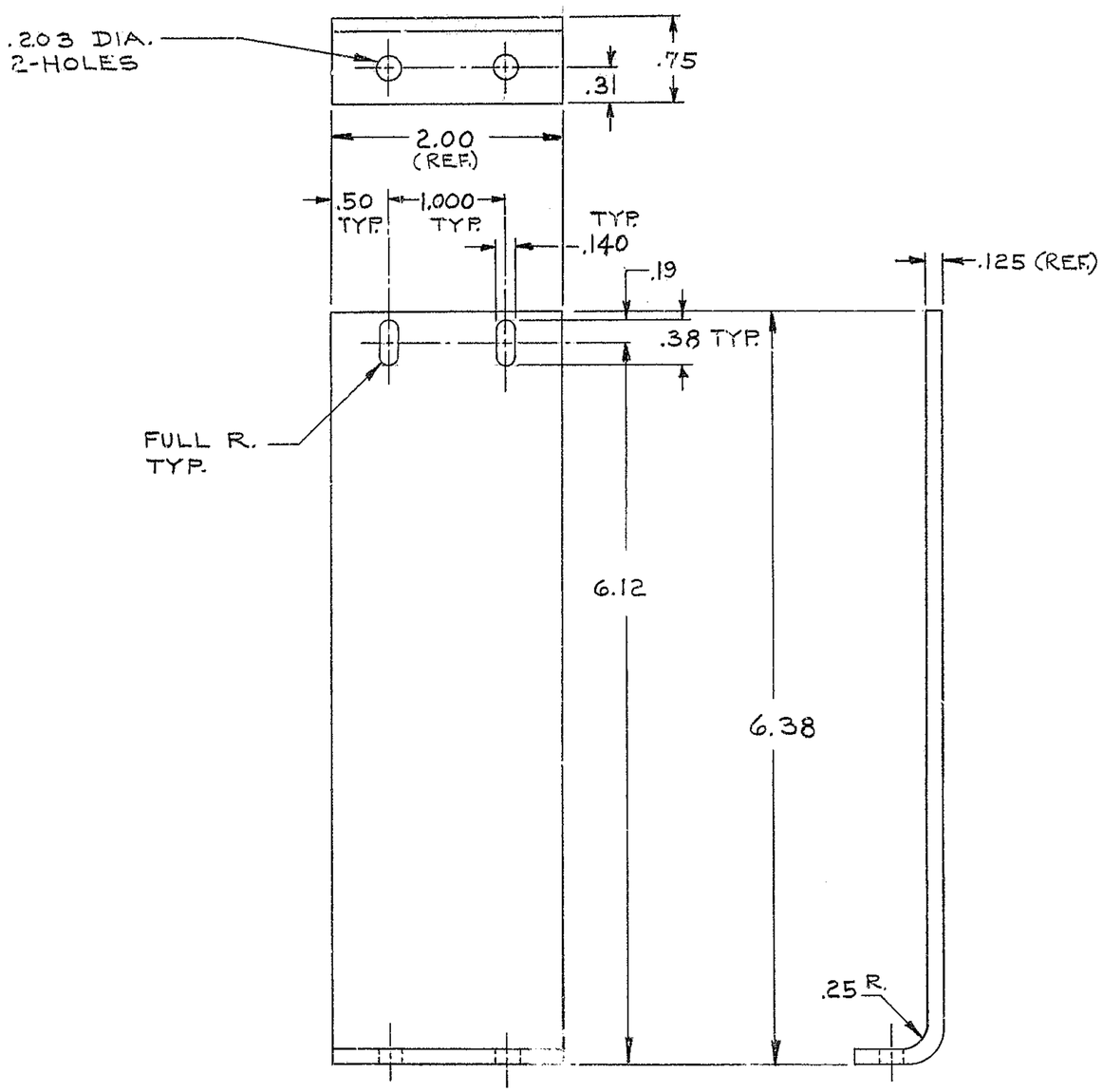

MAT'L:
ALUM. BAR 1/8 X 2
6061-T6 ALLOY
FINISH:
BLACK ANODIZE

5-
4-IDENTIFY BY _____ AT LOCATION 4 , "AURA INC. MADE IN U.S.A."
3-STAMP MATCH MARKS ON ALL MATING PARTS WHERE NECESSARY.
2-PROJECT DRAWINGS _____
1-FOR NEXT ASSY. SEE 2150.530-E302
NOTES-

LET.	REVISION	ECR	DATE	BY

TOLERANCES UNLESS OTHERWISE NOTED

DECIMAL DIMENSIONS
00.00 ± .010
00.000 ± .003

FRACTIONAL DIMENSIONS
UP TO 18" ± 1/64
18" TO 50" ± 1/32
50" & OVER ± 1/16

BREAK SHARP EDGES .01

ALL SURFACES TO HAVE 125 √ FINISH UNLESS OTHERWISE NOTED.

KITT PEAK NATIONAL OBSERVATORY
OPERATED BY THE
ASSOCIATION OF UNIVERSITIES FOR RESEARCH IN ASTRONOMY, INC.
UNDER CONTRACT WITH
NATIONAL SCIENCE FOUNDATION

150 INCH STELLAR TELESCOPE — REF. FILE 1193

NAME: UNLOCKED SWITCH BRACKET

SCALE: FULL

PRINT ISSUED

DESIGNED BY J.B.H.	DATE 2-15-71	APPROVED BY a.a.	DATE 4-1-71
DRAWN BY D.L.B.	DATE 2-15-71	APPROVED BY	DATE
CHECKED BY [illegible]	DATE 4-2-71	APPROVED BY [illegible]	DATE 4-11-71

DRAWING NUMBER 2150.530-C329

REV.