BILL OF MATERIAL

ITEM	QTY.	MATERIAL	DESCRIPTION	WEIGHT
		STEEL	BAR OR STRIP STOCK 1/4 THICK	

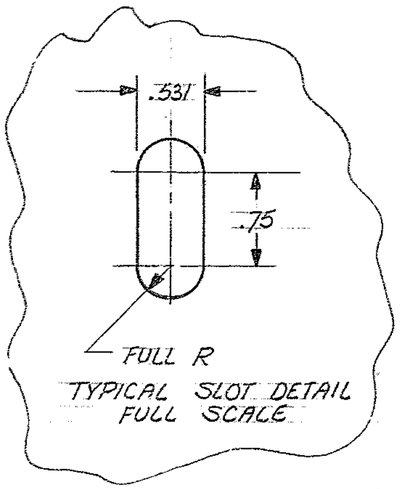

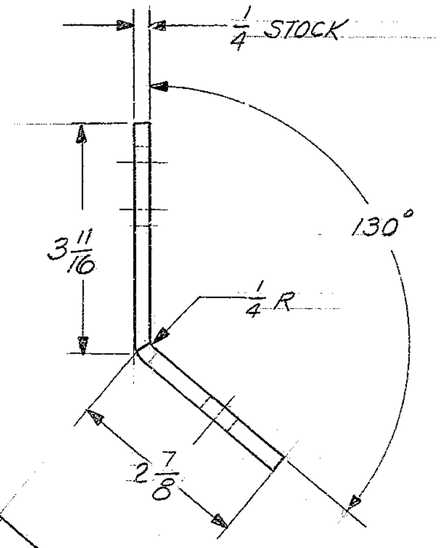

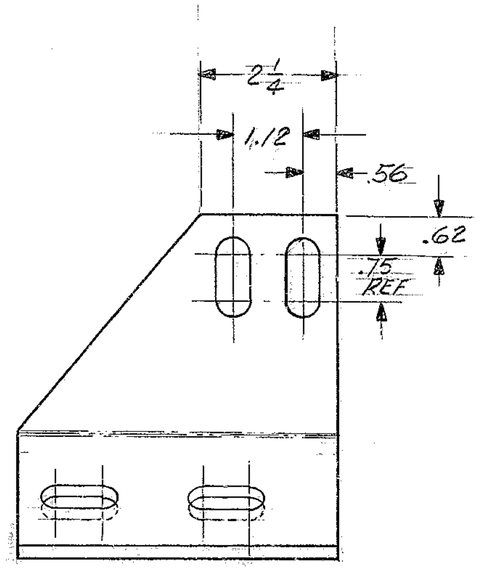

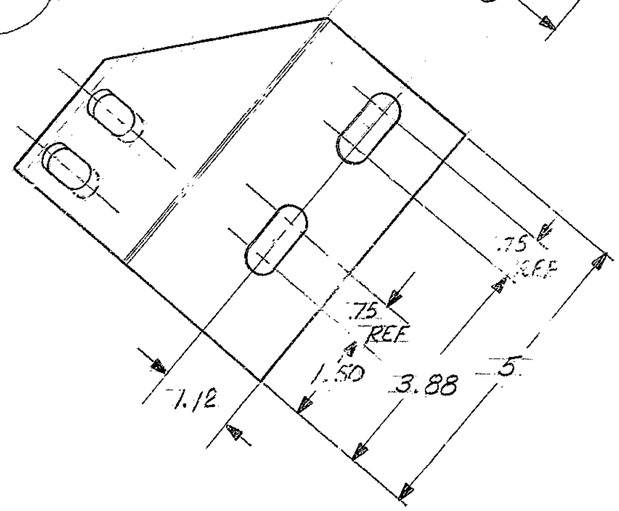

6. PRIME PAINT

5-BREAK SHARP EDGES .03

~~4-IDENTIFY BY AT LOCATION 4, "AURA INC. MADE IN U.S.A."~~

~~3-STAMP MATCH MARKS ON ALL MATING PARTS WHERE NECESSARY.~~

2-PROJECT DRAWINGS

1-FOR NEXT ASSY. SEE 2150.004/014E002 (2120E160)

NOTES-

LET.	REVISION	ECR	DATE	BY

TOLERANCES UNLESS OTHERWISE NOTED

DECIMAL DIMENSIONS
00.00 ± .010
00.000 ± .003

FRACTIONAL DIMENSIONS
UP TO 18" ± 1/64
18" TO 50" ± 1/32
50" & OVER ± 1/16

ANGLES ± 0° −30'

ALL SURFACES TO HAVE 125 √ FINISH UNLESS OTHERWISE NOTED.

KITT PEAK NATIONAL OBSERVATORY

OPERATED BY THE
ASSOCIATION OF UNIVERSITIES FOR RESEARCH IN ASTRONOMY, INC.
UNDER CONTRACT WITH
NATIONAL SCIENCE FOUNDATION

150 INCH STELLAR TELESCOPE

REF. FILE 1188

SCALE HALF

PRINT ISSUED

NAME
INNER MOUNTING BRACKET SUPPORT
R.A. AXIS LIMIT SWITCH ASSY

DESIGNED BY	DATE	APPROVED BY	DATE
J. SHIVELY	7-7-72		
DRAWN BY J. SHIVELY	DATE 7-7-72	APPROVED BY	DATE
CHECKED BY F. HENDY	DATE 10-6-72	APPROVED BY N. Buchler	DATE 10/6/72

DRAWING NUMBER 2150.400-C206

REV.

5/71 DIEYERICH-POST CLEARPRINT 1020-10