NOTES: UNLESS OTHERWISE NOTED
1. REMOVE ALL BURRS AND SHARP EDGES .02
2. MACHINED SURFACE ROUGHNESS 125
3. MAT'L: ALUM. ALLOY.
4. STRESS RELIEVE AFTER WELDING.
5. FINISH: BLACK SULPHERIC ANODIZE.

REVISIONS						
ZONE	LTR	DESCRIPTION	ECR	DATE	BY	APVD
A5	A	CUTOUT WAS 25°	2869	7/11/85	[illegible]	[illegible]

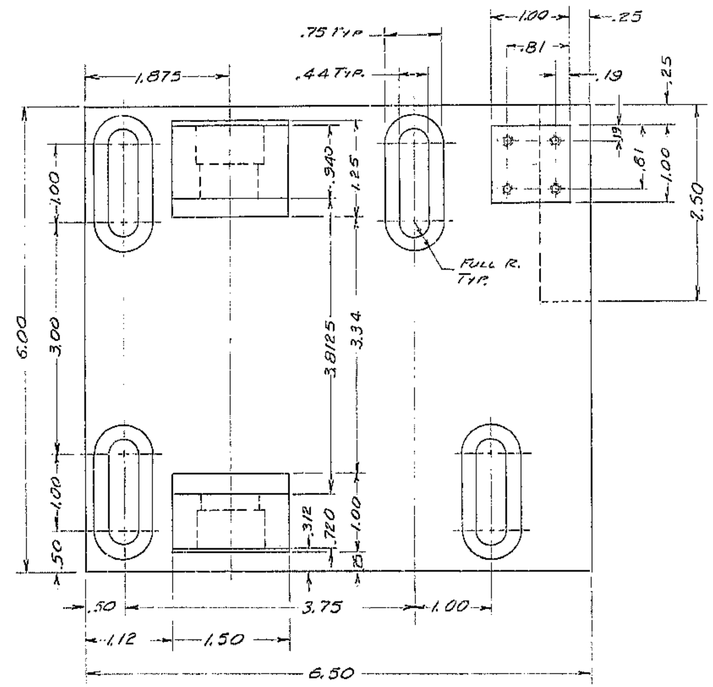

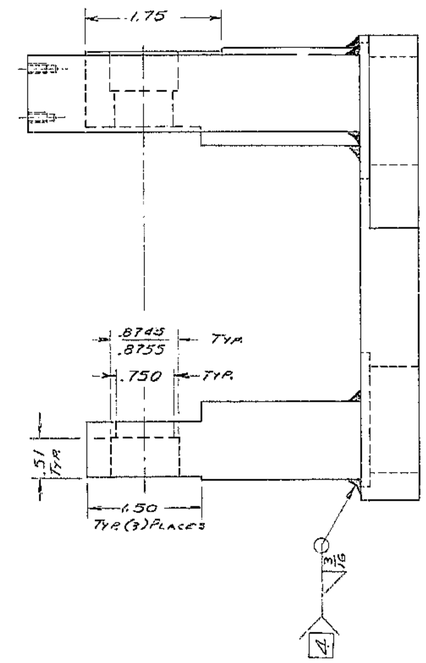

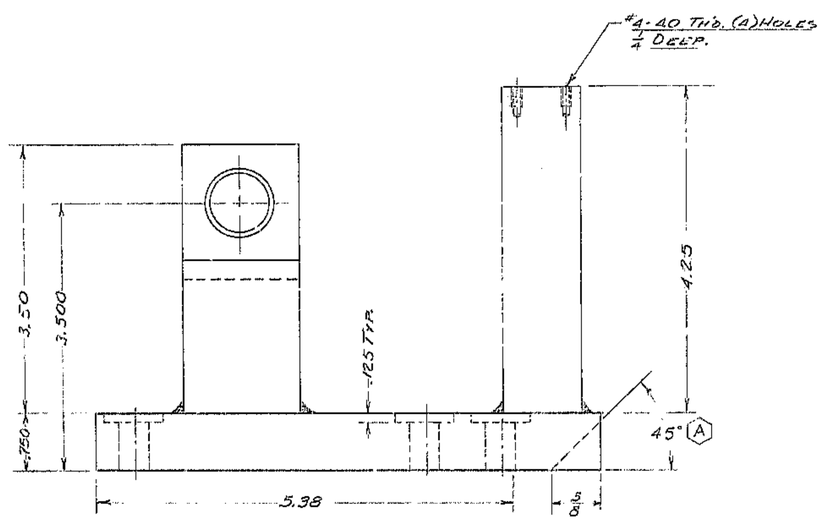

QTY REQD	PART OR IDENTIFYING NO.	DESCRIPTION	MATERIAL/SPECIFICATION	ZONE	ITEM NO.

PARTS LIST

TOLERANCES UNLESS OTHERWISE NOTED
DECIMALS: .XX ± .03, .XXX ± .010
FRACTIONS: ± —
ANGULAR: ± 0° 30'

NEXT ASSEMBLY: 2150.340-E502

KITT PEAK NATIONAL OBSERVATORY
OPERATED BY THE ASSOCIATION OF UNIVERSITIES FOR RESEARCH IN ASTRONOMY, INC.
UNDER CONTRACT WITH NATIONAL SCIENCE FOUNDATION

NAME: ENCODER PIVOT MOUNT
REF FILE: 1186

SCALE: FULL
PRINT ISSUED

DESIGNED BY	DATE	APPROVED BY	DATE	DWG NO.	REV
[illegible]	[illegible]			2150.340-D504	A
DRAWN BY [illegible]	DATE [illegible]	APPROVED BY [illegible]	DATE 11-12-84		
CHECKED BY	DATE	APPROVED BY	DATE	RELEASE DATE 11-12-84	

PEB 11-12-84