NOTES: UNLESS OTHERWISE NOTED
1. REMOVE ALL BURRS AND SHARP EDGES .03
2. MACHINED SURFACE ROUGHNESS 125√
3. MATL: ALUM. ALLOY
4. BLACK SULPHERIC ANODIZE

REVISIONS						
ZONE	LTR	DESCRIPTION	ECR	DATE	BY	APVD

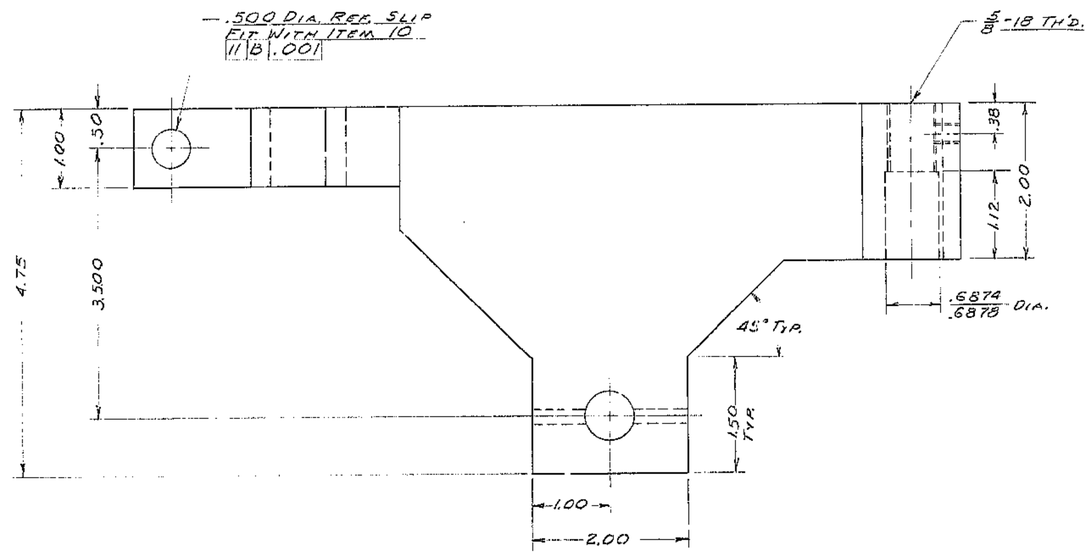

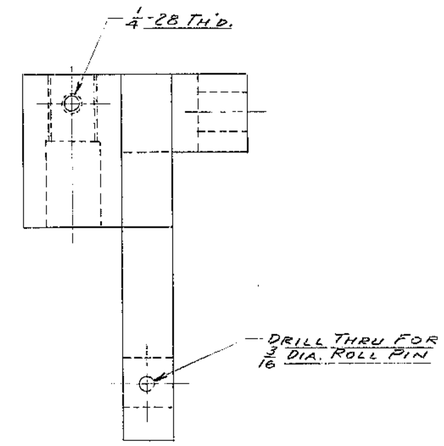

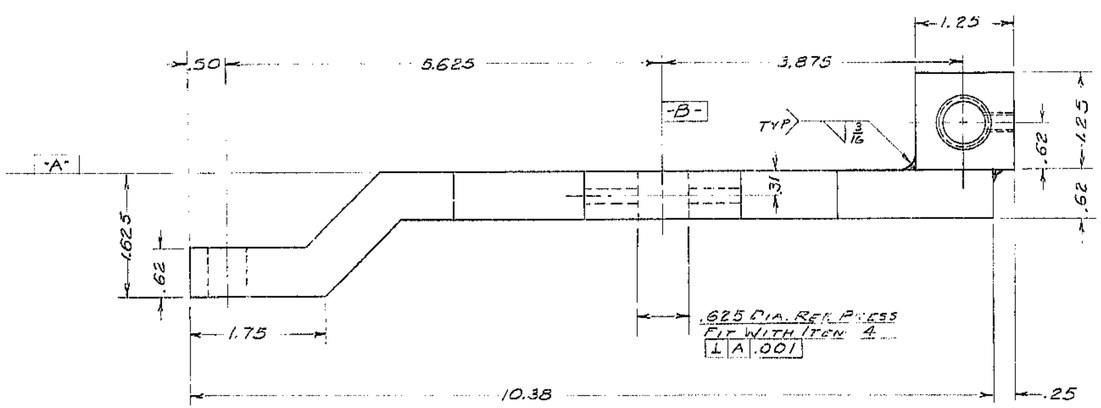

QTY REQD	PART OR IDENTIFYING NO.	DESCRIPTION	MATERIAL/SPECIFICATION	ZONE	ITEM NO.

PARTS LIST

TOLERANCES UNLESS OTHERWISE NOTED
DECIMALS: .XX ± .03, .XXX ± .010
FRACTIONS: ± ---
ANGULAR: ± 0° 30'

NEXT ASSEMBLY: 2150.340-E502

SCALE FULL

PRINT ISSUED

KITT PEAK NATIONAL OBSERVATORY
OPERATED BY THE ASSOCIATION OF UNIVERSITIES FOR RESEARCH IN ASTRONOMY, INC.
UNDER CONTRACT WITH NATIONAL SCIENCE FOUNDATION

NAME: PRESSURE ARM

REF FILE: 1186

DWG NO. 2150.340-D503 REV

DESIGNED BY: [illegible] DATE 8/21/84 APPROVED BY: [illegible] DATE
DRAWN BY: [illegible] DATE 8/21/84 APPROVED BY: [illegible] DATE 8/21/84
CHECKED BY DATE APPROVED BY DATE
RELEASE DATE 11-12-84

PEB 11-12-84