BILL OF MATERIAL

ITEM	QTY.	MATERIAL	DESCRIPTION	WEIGHT
				1.44

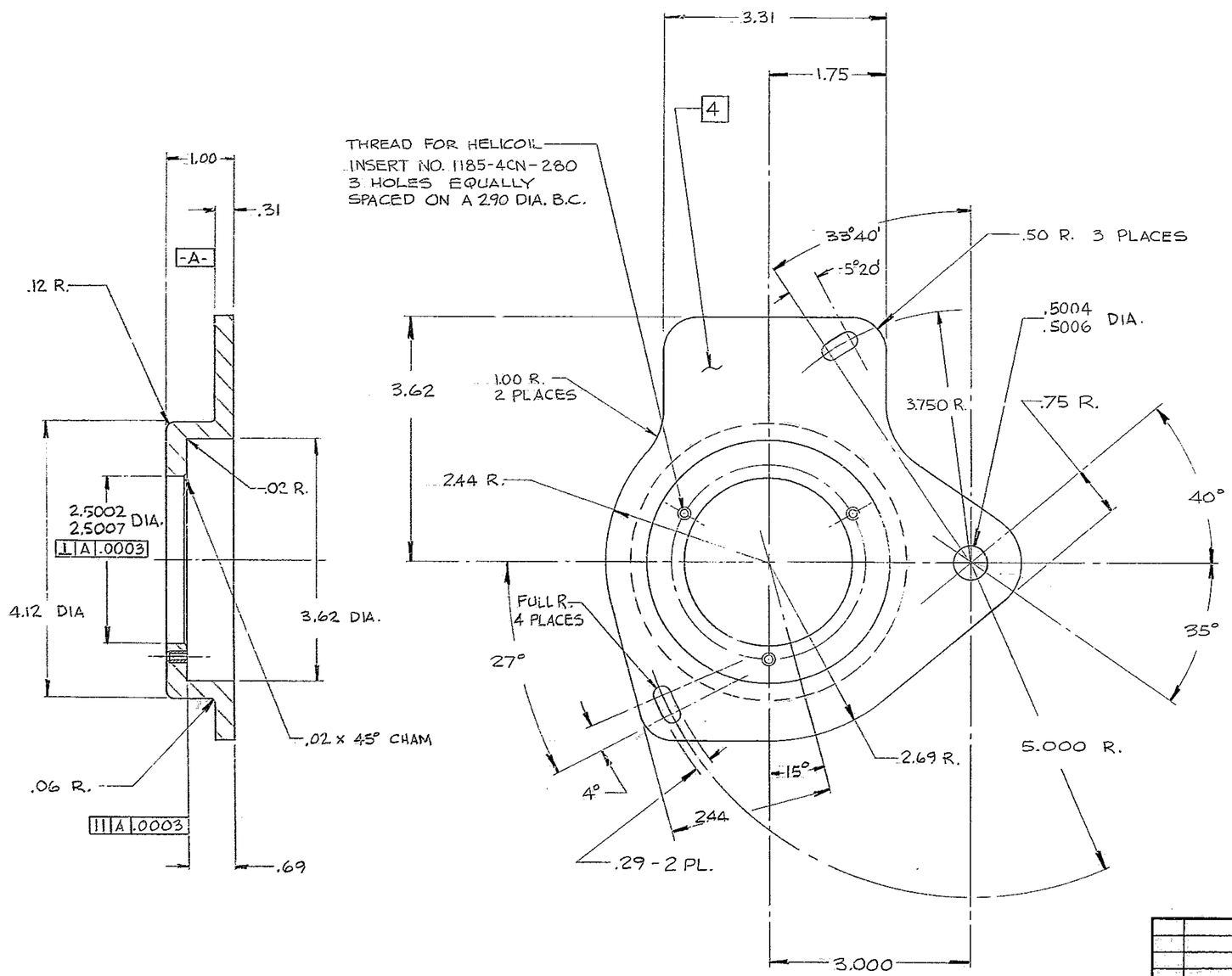

8. MATL: AL ALLOY
7. BLACK ANODIZE PER MIL-A-8625 TYPE II, CL 2, DIM. HELD AFTER ANODIZE.
6. INTERPRET DWG. PER USASI-Y 14.5-1966.
5-BREAK SHARP EDGES .03
4-IDENTIFY BY STEEL STAMP AT LOCATION 4 ~~"AURA INC. MADE IN U.S.A."~~
~~3-STAMP MATCH MARKS ON ALL MATING PARTS WHERE NECESSARY.~~
2-PROJECT DRAWINGS ——
1-FOR NEXT ASSY. SEE 2150.340 E 002
NOTES-

LET.	REVISION	ECR	DATE	BY

TOLERANCES UNLESS OTHERWISE NOTED
DECIMAL DIMENSIONS 00.00 ±.010 00.000 ±.003
FRACTIONAL DIMENSIONS UP TO 18" ± 1/64 18" TO 50" ± 1/32 50" & OVER ± 1/16
ANGLES ± 0°-30'
ALL SURFACES 125 TO HAVE √ FINISH UNLESS OTHERWISE NOTED.

KITT PEAK NATIONAL OBSERVATORY
OPERATED BY THE ASSOCIATION OF UNIVERSITIES FOR RESEARCH IN ASTRONOMY, INC. UNDER CONTRACT WITH NATIONAL SCIENCE FOUNDATION

.150" STELLAR TELESCOPE
REF. FILE 1186
NAME ENCODER ADAPTOR
SCALE 1/1
PRINT ISSUED

DESIGNED BY	DATE	APPROVED BY	DATE	DRAWING NUMBER	REV.
DRAWN BY PARNESS	DATE 8-11-71	APPROVED BY Brace	DATE 10/10/71	2150.340 -D040	
CHECKED BY CHADD.	DATE 10-19-71	APPROVED BY [illegible]	DATE 10-7-71		

5/71 DIETERICH-POST CLEARPRINT 2020-30

COLLINS-PHOENIX ENGINEERING CORP.