BILL OF MATERIAL

ITEM	QTY.	MATERIAL	DESCRIPTION	WEIGHT
1	1	STEEL	1.25 DIA. × .31	
2	1	STEEL	.95 × 3.19 × 9.81	
3	1	STEEL	1.25 × 1.25 × 2.25	

2.30

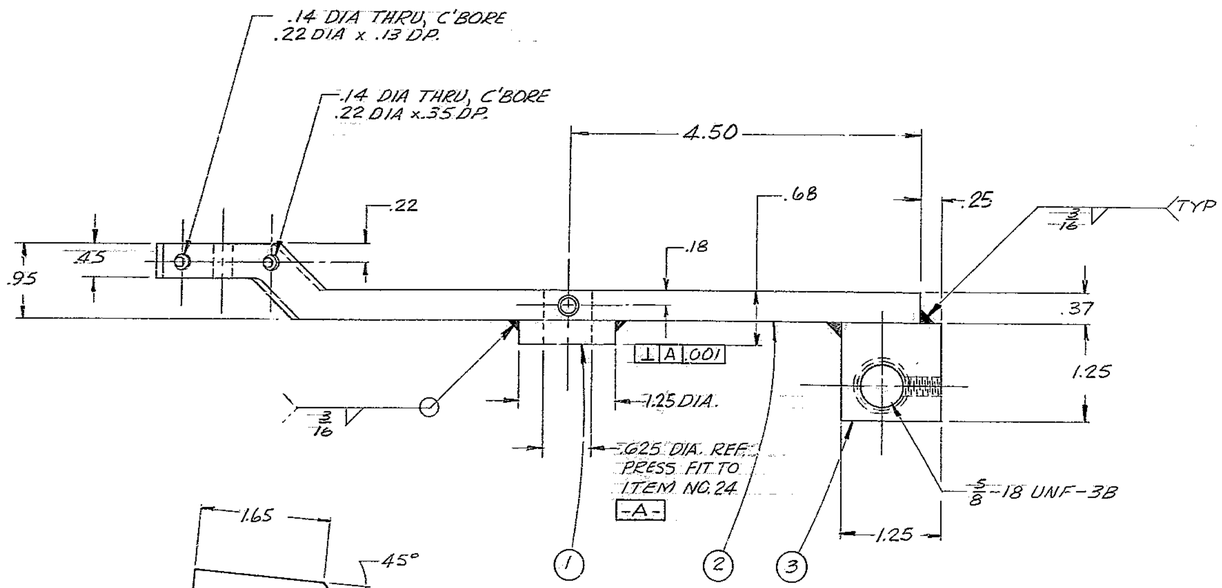

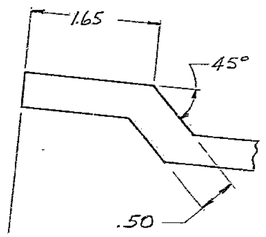

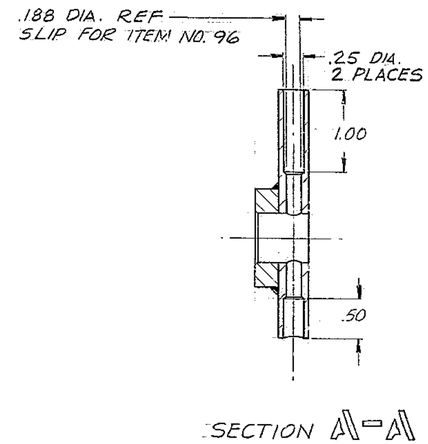

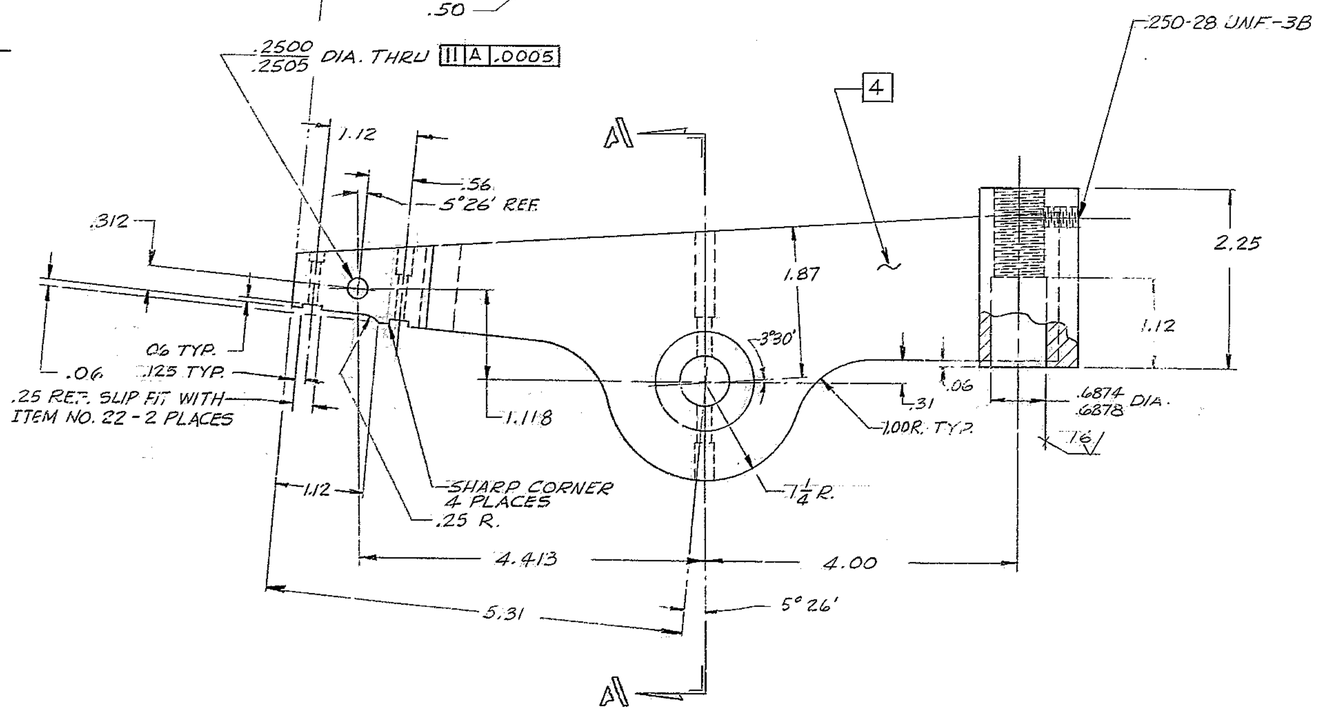

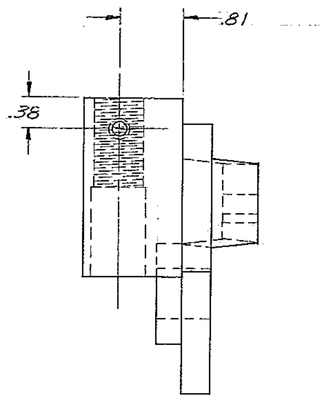

8. INTERPRET DWG. PER USAS1-Y14.5-1966.

7. ALL DIMENSIONS AFTER PLATING.

6. CD PLATE PER QQ-P-416 TYPE II, CL.3.

5-BREAK SHARP EDGES .03

4-IDENTIFY BY STEEL STAMP AT LOCATION 4, "AURA INC. MADE IN U.S.A."

3-~~STAMP MATCH MARKS ON ALL MATING PARTS WHERE NECESSARY.~~

2-PROJECT DRAWINGS ——

1-FOR NEXT ASSY. SEE 2150.340 E 002

NOTES-

LET.	REVISION	ECR	DATE	BY

TOLERANCES UNLESS OTHERWISE NOTED

DECIMAL DIMENSIONS
00.00 ± .010
00.000 ± .003

FRACTIONAL DIMENSIONS
UP TO 18" ± 1/64
18" TO 50" ± 1/32
50" & OVER ± 1/16

ANGLES ± 0° −30'

ALL SURFACES TO HAVE 125 √ FINISH UNLESS OTHERWISE NOTED.

KITT PEAK NATIONAL OBSERVATORY

OPERATED BY THE
ASSOCIATION OF UNIVERSITIES FOR RESEARCH IN ASTRONOMY, INC.
UNDER CONTRACT WITH
NATIONAL SCIENCE FOUNDATION

150" STELLAR TELESCOPE — REF. FILE: 1186

NAME: ENCODER DRIVE PRESSURE ARM

SCALE: FULL

PRINT ISSUED

DESIGNED BY	DATE	APPROVED BY	DATE
DRAWN BY PIERCE	DATE 8/24/71	APPROVED BY Pierce	DATE 10/18/71
CHECKED BY CHADD	DATE 10-18-71	APPROVED BY	DATE

DRAWING NUMBER 2150.340 -D 019 — REV.

8/71 · DIETERICH-POST CLEARPRINT 1020-20

COLLINS-PHOENIX