BILL OF MATERIAL

ITEM	QTY.	MATERIAL	DESCRIPTION	WEIGHT

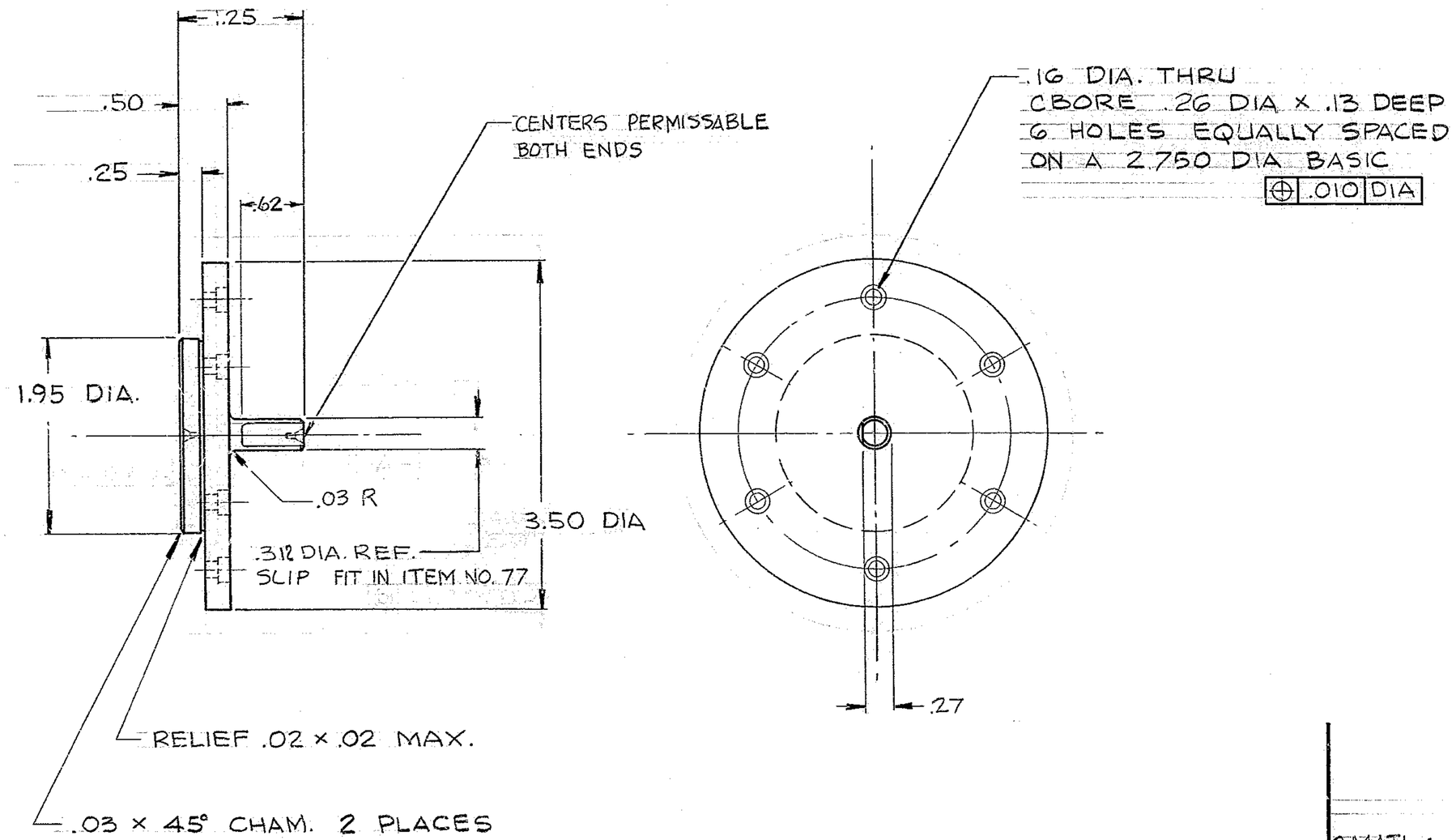

8. MATL: STEEL AISI 4340
7. HEAT TREAT R/C 32-35
6. INTERPRET DWG PER USASI-Y14.5-1966.
5-BREAK SHARP EDGES .03
4-IDENTIFY BY TAG ~~AT LOCATION 4, "AURA INC. MADE IN U.S.A."~~
3-~~STAMP MATCH MARKS ON ALL MATING PARTS WHERE NECESSARY.~~
2-PROJECT DRAWINGS ——
1-FOR NEXT ASSY. SEE 2150.340 E 002
NOTES-

LET.	REVISION	ECR	DATE	BY

TOLERANCES UNLESS OTHERWISE NOTED
DECIMAL DIMENSIONS
00.00 ± .010
00.000 ± .003
FRACTIONAL DIMENSIONS
UP TO 18" ± 1/64
18" TO 50" ± 1/32
50" & OVER ± 1/16
ANGLES ± 0° −30'
ALL SURFACES TO HAVE 125 √ FINISH UNLESS OTHERWISE NOTED.

KITT PEAK NATIONAL OBSERVATORY
OPERATED BY THE
ASSOCIATION OF UNIVERSITIES FOR RESEARCH IN ASTRONOMY, INC.
UNDER CONTRACT WITH
NATIONAL SCIENCE FOUNDATION

150" STELLAR TELESCOPE — REF. FILE 1186
NAME: ENCODER ADAPTOR — SCALE 1/1 — PRINT ISSUED

DESIGNED BY	DATE	APPROVED BY	DATE
DRAWN BY FARNESS	DATE 9-28-71	APPROVED BY Barr	DATE 10/19/71
CHECKED BY CHADD.	DATE 10-19-71	APPROVED BY [illegible]	DATE 10-19-71

DRAWING NUMBER: 2150.340-C046 — REV.

COLLINS-PHOENIX ENGINEERING CORP.

5/71 DIETERICH-POST CLEARPRINT 1020-10