BILL OF MATERIAL

ITEM	QTY.	MATERIAL	DESCRIPTION	WEIGHT
				1.16

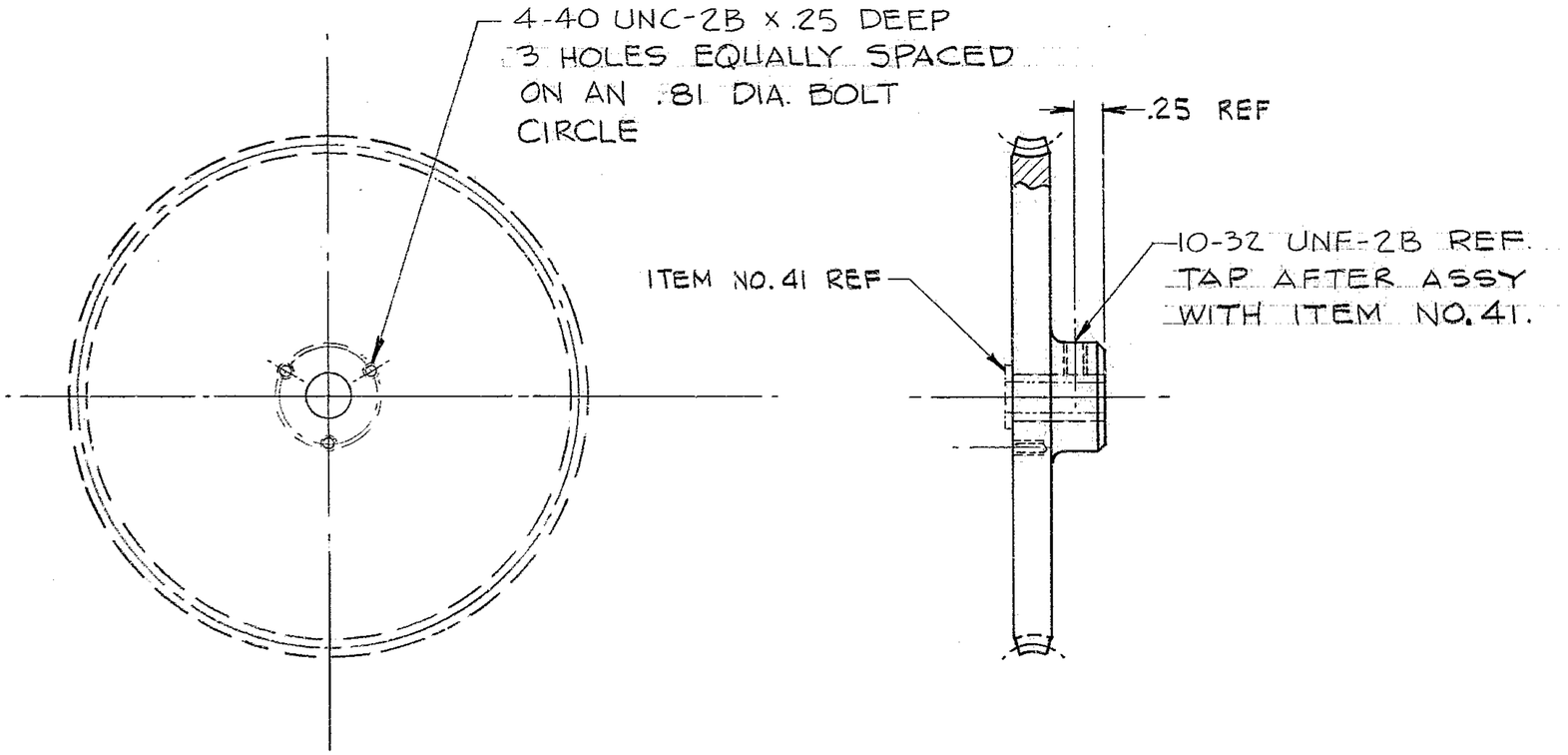

7. INTERPRET DWG PER USASI-Y14.5-1966

6. MAKE FROM: OHIO GEAR NO. BW-1664-S

5-BREAK SHARP EDGES —

4-IDENTIFY BY TAG ~~AT LOCATION~~ ~~"AURA INC. MADE IN U.S.A."~~

3-~~STAMP MATCH MARKS ON ALL MATING PARTS WHERE NECESSARY.~~

2-PROJECT DRAWINGS —

1-FOR NEXT ASSY. SEE 2150.340 E 002

NOTES-

LET.	REVISION	ECR	DATE	BY

TOLERANCES UNLESS OTHERWISE NOTED

DECIMAL DIMENSIONS
00.00 ± .010
00.000 ± .003

FRACTIONAL DIMENSIONS
UP TO 18" ± 1/64
18" TO 50" ± 1/32
50" & OVER ± 1/16

ANGLES ± 0° −30'

ALL SURFACES TO HAVE 125 √ FINISH UNLESS OTHERWISE NOTED.

KITT PEAK NATIONAL OBSERVATORY

OPERATED BY THE
ASSOCIATION OF UNIVERSITIES FOR RESEARCH IN ASTRONOMY, INC.
UNDER CONTRACT WITH
NATIONAL SCIENCE FOUNDATION

150" STELLAR TELESCOPE

REF. FILE 1186

NAME: WORM GEAR

SCALE 1/1

PRINT ISSUED

DESIGNED BY	DATE	APPROVED BY	DATE
DRAWN BY PARNESS	DATE 8-24-71	APPROVED BY BAKER	DATE 10/19/71
CHECKED BY CHADD.	DATE 10-19-71	APPROVED BY 86	DATE 10-19-71

DRAWING NUMBER 2150.340-C045

REV.

5/71 DIETERICH-POST CLEARPRINT 1020-10

COLLINS-PHOENIX ENGINEERING CORP.