BILL OF MATERIAL

ITEM	QTY.	MATERIAL	DESCRIPTION	WEIGHT
				.571

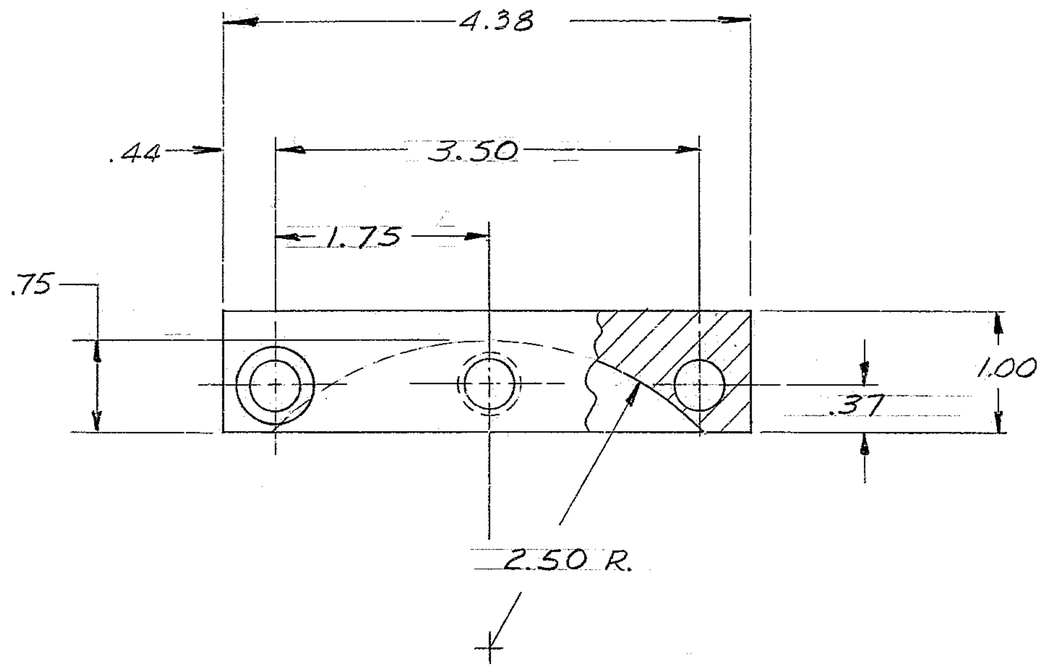

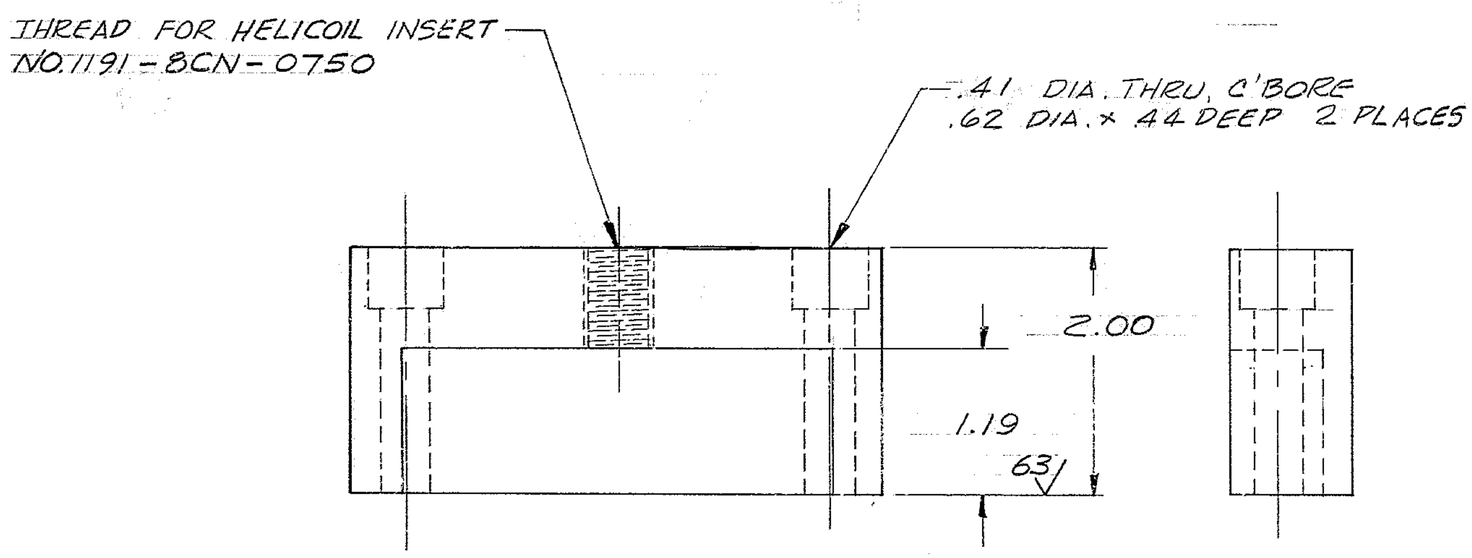

8. MATL: AL ALLOY

7. INTERPRET DWG PER USASI-Y14.5-1966

6. BLACK ANODIZE PER MIL-A-8625 TYPE II, CL 2, DIM. HELD AFTER COATING.

5-BREAK SHARP EDGES .03

4-IDENTIFY BY TAG ~~AT LOCATION 4~~, ~~"AURA INC. MADE IN U.S.A."~~

3-~~STAMP MATCH MARKS ON ALL MATING PARTS WHERE NECESSARY.~~

2-PROJECT DRAWINGS —

1-FOR NEXT ASSY. SEE 2150.340 E 002

NOTES-

LET.	REVISION	ECR	DATE	BY

TOLERANCES UNLESS OTHERWISE NOTED

DECIMAL DIMENSIONS
00.00 ± .010
00.000 ± .003

FRACTIONAL DIMENSIONS
UP TO 18" ± 1/64
18" TO 50" ± 1/32
50" & OVER ± 1/16

ANGLES ± 0° −30'

ALL SURFACES TO HAVE 125 √ FINISH UNLESS OTHERWISE NOTED.

KITT PEAK NATIONAL OBSERVATORY

OPERATED BY THE
ASSOCIATION OF UNIVERSITIES FOR RESEARCH IN ASTRONOMY, INC.
UNDER CONTRACT WITH
NATIONAL SCIENCE FOUNDATION

150" STELLAR TELESCOPE — REF. FILE 1186

NAME: VERTICAL ADJUSTMENT BLOCK — SCALE FULL — PRINT ISSUED

DESIGNED BY	DATE	APPROVED BY	DATE
DRAWN BY PIERCE	DATE 8/18/71	APPROVED BY Baur	DATE 10/10/71
CHECKED BY CHADD.	DATE 10-19-71	APPROVED BY BG	DATE 10-19-71

DRAWING NUMBER 2150.340 -C009 — REV.

COLLINS-PHOENIX ENGINEERING CORP.

5/71 DIETERICH-POST CLEARPRINT 1020-10