THIS DOCUMENT CONTAINS INFORMATION PROPRIETARY TO WESTERN GEAR CORPORATION. ALL DESIGN, MANUFACTURING, REPRODUCTION, USE, PATENT, AND SALES RIGHTS REGARDING THE SAME ARE HEREBY EXPRESSLY RESERVED BY WESTERN GEAR CORPORATION. THIS DOCUMENT IS SUBMITTED FOR REFERENCE PURPOSES ONLY AND SHALL NOT BE DISCLOSED TO ANY UNAUTHORIZED PERSON OR INCORPORATED INTO ANY OTHER PROJECT.

REVISIONS				
ZONE	LTR	DESCRIPTION	DATE	APPROVED

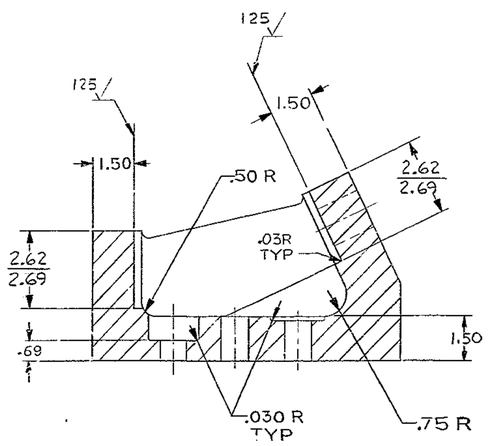

SECTION A-A

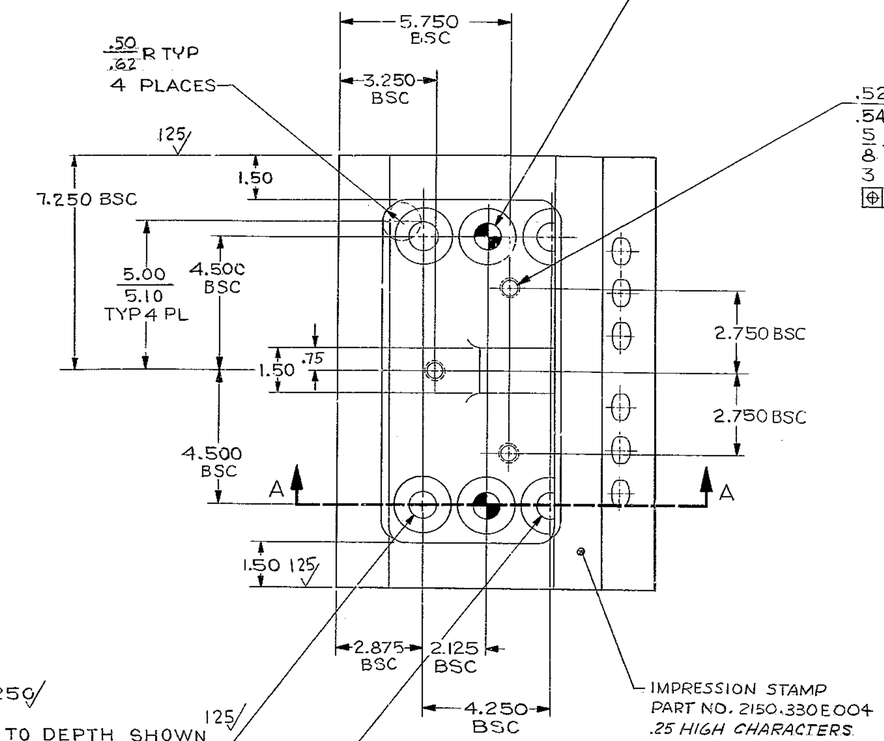

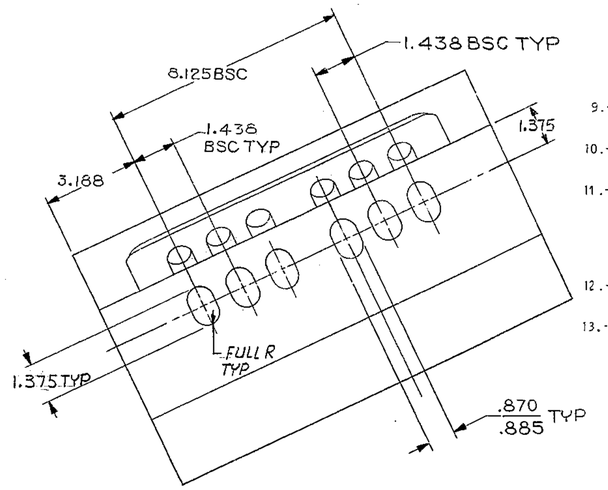

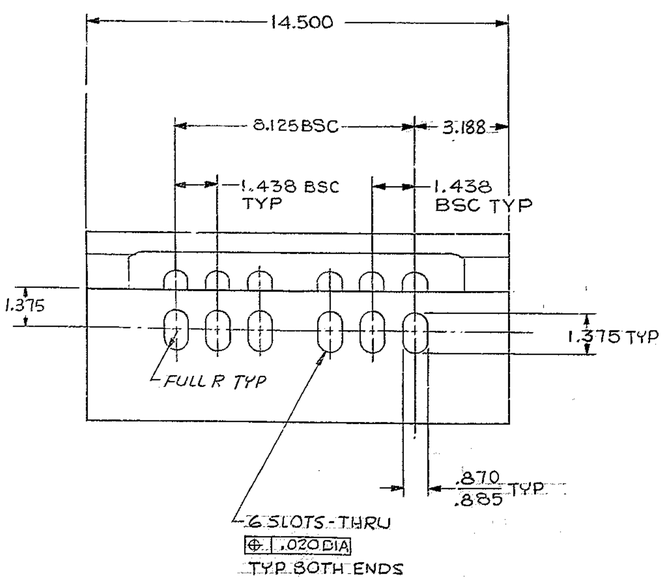

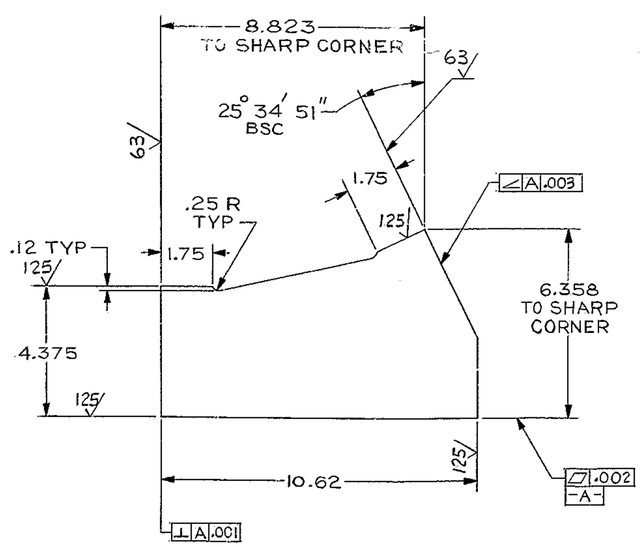

NOTES: UNLESS OTHERWISE SPECIFIED:

1.- ALL DIMENSIONS ARE IN INCHES.

2.- INTERPRET DIMENSIONING AND TOLERANCING PER USA STANDARD USAS-Y14.5-1966.

3.- MATERIAL: CAST STEEL, ASTM A148-65, GR 80/50 WITH MAXIMUM CARBON CONTENT OF .30% (4130 ANALYSIS PREFERRED). MECHANICAL PROPERTIES TO BE ATTAINED BY NORMALIZING AT 1600°F. SUBSEQUENT STRESS RELIEVING AT 1250°F.

4.- CASTING TO BE OIL TIGHT AND FREE FROM ALL INJURIOUS DEFECTS AS PER SPEC. A148-65.

5.- ALL CAST FILLET RADII TO BE .50; EDGE RADII .12 INCHES.

6.- PROVIDE .38 STOCK MATERIAL ON ALL MACHINED SURFACES.

7.- SURFACE ROUGHNESS AS DESIGNATED PER USA-STANDARD USAS-B46.1-1962.

8.- HEAT TREAT: A. STRESS RELIEVE AT 1250°F. HOLD FOR 3 HOURS AT TEMPERATURE. CAREFULLY SUPPORT IN FURNACE TO AVOID DISTORTION.
B. FURNACE COOL AT A RATE OF 50°F PER HOUR UNTIL FURNACE TEMPERATURE HAS REACHED 400°F. THEN CASTING MAY BE AIR COOLED.
C. ROUGH MACHINE LEAVING 1/16 STOCK MIN FOR FINISHING ON ALL MACHINED SURFACES AND REPEAT STEPS A AND B.

9.- MACHINING NO CARBIDE TOOLS ON FINISH MACHINING. USE HIGH SPEED STEEL CUTTING TOOLS ONLY.

10.- FURNISH CERTIFICATES OF PHYSICAL & CHEMICAL PROPERTIES OF CASTING.

11.- HAND GRIND ALL EXTERIOR NON-MACHINED SURFACES, FILLETS, AND CORNER RADII TO PRODUCE A SMOOTH APPEARANCE. PUTTY ALL UNEVEN NON-MACHINED SURFACES USING GRAY SPOT PUTTY, TRAIL CHEM CO., EL MONTE, CALIFORNIA, TO PRODUCE FLAT SURFACE.

12.- APPLY ONE COAT OF PRIME PAINT ALL OVER EXCEPT MACHINED SURFACES PER W.G.C. SPEC. NO. 511.

13.- ULTRASONIC AND MAGNETIC INSPECTION OF CASTING REQUIRED.

1185

NEXT ASSY: 2150.330E002 (82402-44175R302)

FIND NO.	PART NO.	DESCRIPTION	QTY	MATERIAL	CODE IDENT
LIST OF MATERIAL (LM)					

LIMITS ON MACHINED DIMENSIONS EXCEPT AS NOTED
ANGULAR = ± 1° 0′
LINEAR:
.X = ± .1 .XXX = ± .010
.XX = ± .03 FRACTIONAL = ± 1/32
BREAK ALL SHARP EDGES
MATERIAL
SEE NOTE 3.

150 IN STELLAR TELESCOPE MTG

DRAWN	J. Lasser	8-12-69
CHECK		9-19-69
ENGR	V.V.G.	9-29-69
METALLURGIST		10-1-69

82402-44175R304

APPROVED

WESTERN GEAR CORPORATION — HEAVY MACHINERY DIVISION, EVERETT, WASHINGTON

BRACKET, INTERMEDIATE-DECLINATION MOUNTING

SIZE	CODE IDENT NO.		REV
E	16603	2150.330E004	-

SCALE 1/2 WT — LB SHEET 1 OF 1

REV

44175 R 304