NOTES: UNLESS OTHERWISE NOTED
1. REMOVE ALL BURRS AND SHARP EDGES .06 R MAX
2. MACHINED SURFACE ROUGHNESS 125
3. MATL - HRS
4. FINISH - PRIME & PAINT TO MATCH TEL.
5. WELD PER AURA SPEC 9020-A1 EXCEPT NO STRESS RELIEF REQ'D.

REVISIONS					
LTR	DESCRIPTION	ECR	DATE	BY	APVD

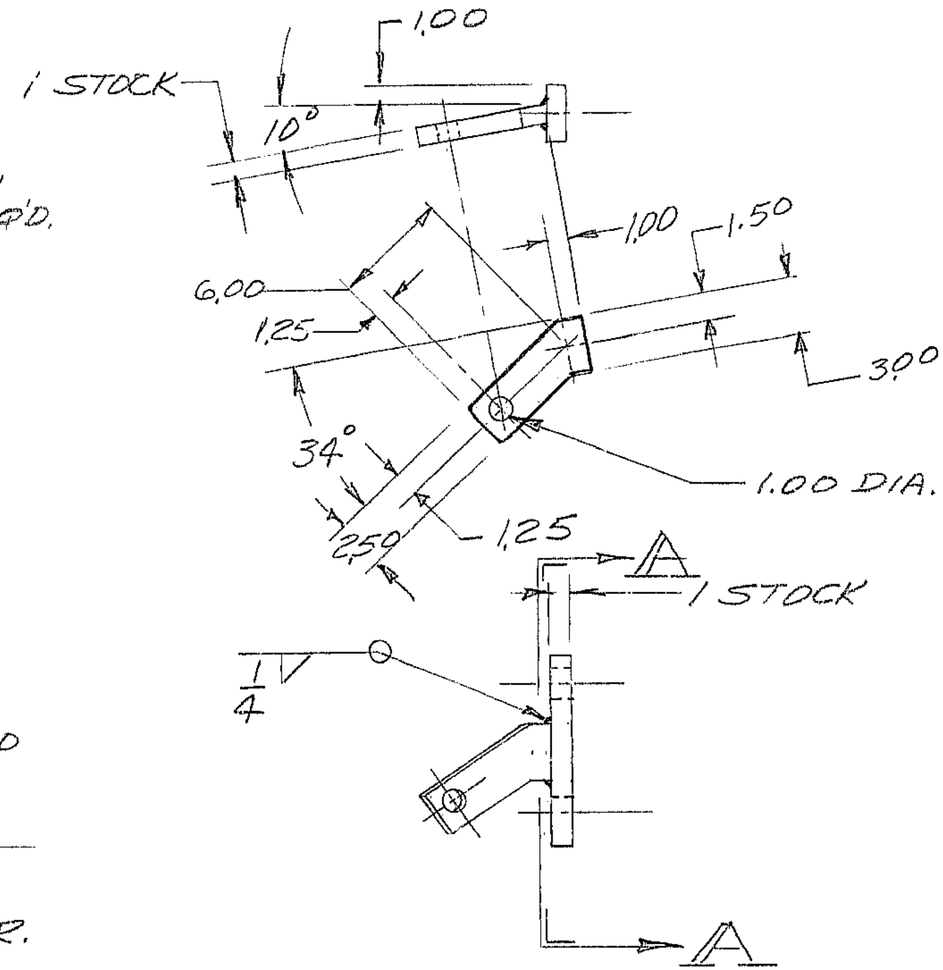

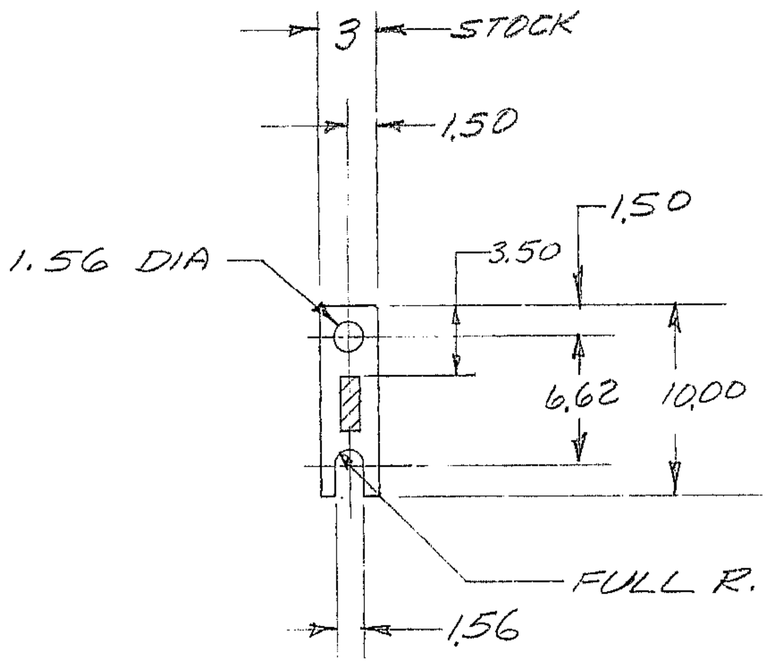

SECTION A-A

TOLERANCES UNLESS OTHERWISE NOTED

DECIMALS	FRACTIONS	ANGULAR
.XX ± .03	± —	± 0° 30'
.XXX ± .010		

KITT PEAK NATIONAL OBSERVATORY
OPERATED BY THE
ASSOCIATION OF UNIVERSITIES FOR RESEARCH IN ASTRONOMY, INC.
UNDER CONTRACT WITH
NATIONAL SCIENCE FOUNDATION

NEXT ASSEMBLY	NAME	REF FILE
2150.330-E102	UPPER ATTACHING PLATE	1185

SCALE 1/8	DESIGNED BY	DATE	APPROVED BY	DATE	DWG NO.	REV
PRINT ISSUED	DRAWN BY MANEY	DATE 1-17-74	APPROVED BY	DATE	2150.330-B108	
	CHECKED BY	DATE	APPROVED BY	DATE	RELEASE DATE 1-22-74	

RAC 1-22-74