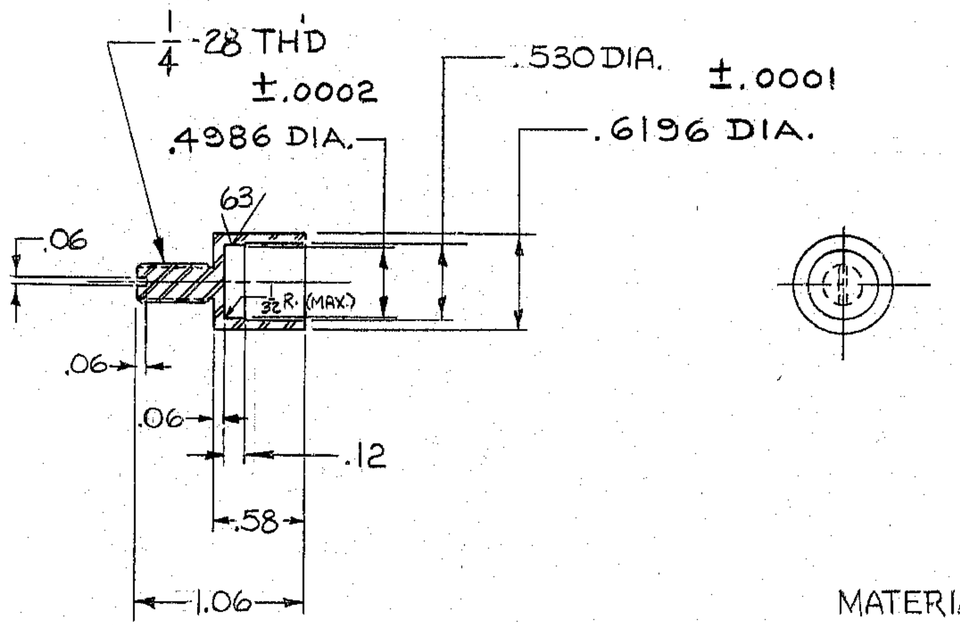

MATERIAL: #416 STAINLESS STEEL

FOR ASSEMBLY SEE 2150.290-E002 2150.290-E102

LET.	REVISION ON	ECR	DATE	BY

TOLERANCES UNLESS OTHERWISE NOTED
DECIMAL DIMENSIONS 00.00 ±.010 00.000 ±.003
FRACTIONAL DIMENSIONS UP TO 18" ±1/64 18" TO 50" ±1/32 50" & OVER ±1/16
BREAK SHARP EDGES .02
ALL SURFACES TO HAVE 125√ FINISH UNLESS OTHERWISE NOTED.

KITT PEAK NATIONAL OBSERVATORY
OPERATED BY THE
ASSOCIATION OF UNIVERSITIES FOR RESEARCH IN ASTRONOMY, INC.
UNDER CONTRACT WITH
NATIONAL SCIENCE FOUNDATION

150" STELLAR TELESCOPE | REF. FILE 1180

NAME: BALL RETAINER
HORIZON DISCRIMINATING SWITCH

SCALE: FULL
PRINT ISSUED

DES'D BY J.B.H.	DATE 11-5-69	APP'D BY A.A.A.	DATE 11-10-70
DRN BY G. FORD	DATE 11-5-69	APP'D BY	DATE
CH'KD BY [illegible]	DATE 12-30-70	APP'D BY J.W.	DATE 11-10-70

DRAWING NUMBER 2150.290-B014

REV.

10/68 DIETERICH-POST CLEARPRINT 1020