BILL OF MATERIAL

ITEM	QTY.	MATERIAL	DESCRIPTION	WEIGHT
1	2	HRS	L 2 1/2 × 2 1/2 × 3/8 × 26 5/8 LG	
2	1	"	PLATE 11 1/4 × 11 1/4 × 5/8	
3	1	"	SHEET 11 1/4 × 11 1/4 × 1/4	
A1 4	2	"	SHEET 16 GA (.060) × 14 1/2 × 26 3/8 LG	
A2 5	1	HRS	TUBING 1 1/2 O.D. × 1 1/4 I.D. × 20 27/32 LG	
6	AR	LEAD	94% LEAD & 6% ANTIMONY	950#
A3 7	1	CRS	TUBING 4 O.D. × 3 1/2 I.D. × 4 1/8 LG	
A4 8	1	HRS	SHEET 1/8 × 4 × 4	
9	1	CRS	TUBING 4 1/2 OD × 16 GA (.065) × 1 3/8 LG	
A5 10	1	HRS	SHEET 1/8 × 4 1/2 × 4 1/2	

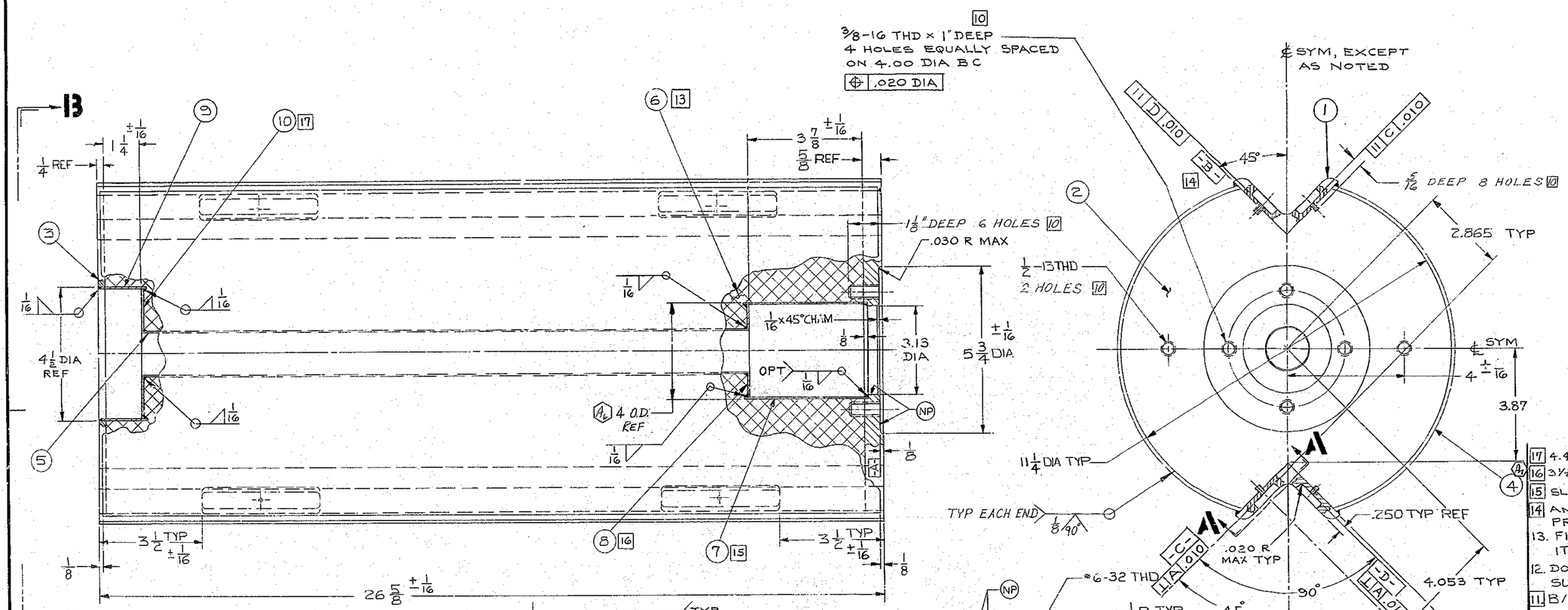

SECTION A-A
ROTATED 45° CCW
TYP 8 PLACES

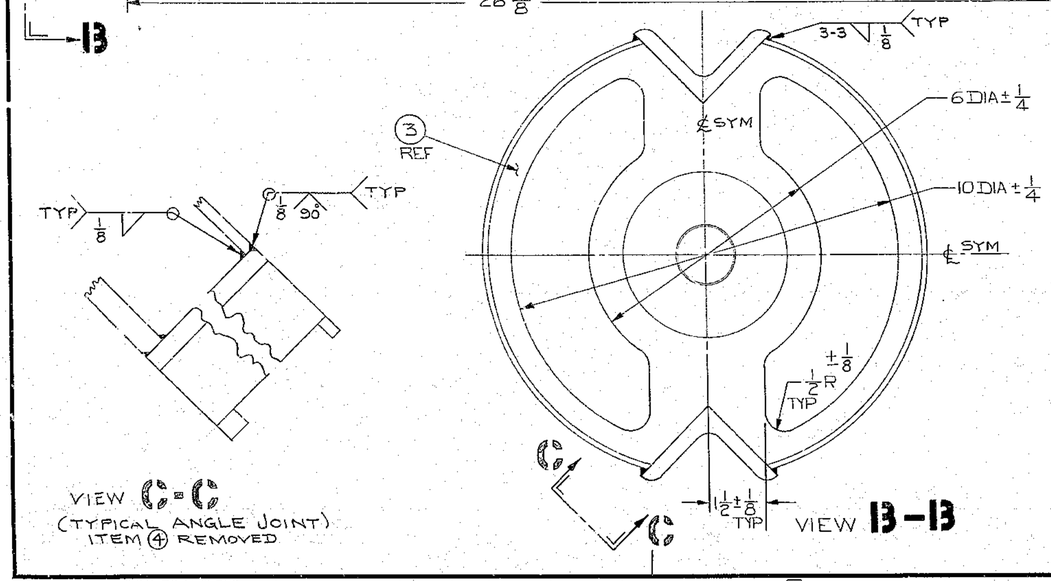

17. 4.44 NOM OD, 1 1/2 NOM ID, SLIP FIT WITH ITEMS 5 & 9
16. 3 1/2 NOM OD, 1 1/2 NOM ID, SLIP FIT WITH ITEMS 5 & 7
15. SLIP FIT ITEM 7 INTO ITEM 2
14. ANGLES TO BE FREE OF SCALE AND ALIGNED PRIOR TO WELDING.
13. FILL WITH LEAD TO INSIDE SURFACE OF ITEM 3 END PLATE.
12. DO NOT PAINT THREADED HOLES OR SURFACES MARKED NP.
11. B/M DOES NOT INCLUDE CUTTING ALLOWANCES
10. INSERT SCREWS TO DEPTH NOTED ON DRAWING BEFORE POURING LEAD.
9. FABRICATION STEPS: (1) WELD, (2) STRESS RELIEVE, (3) MACHINE, (4) POUR LEAD
8. SANDBLAST & APPLY 2 COATS OF RED LEAD PRIMER
7. APPROXIMATE WEIGHT 1122 lbs ± 20 lbs
6. ALL MACHINED SURFACES TO HAVE 125 FINISH
5-BREAK SHARP EDGES .02
4-IDENTIFY BY _____ AT LOCATION 4, "AURA INC. MADE IN U.S.A."
3-STAMP MATCH MARKS ON ALL MATING PARTS WHERE NECESSARY.
2-PROJECT DRAWINGS _____
1-FOR NEXT ASSY. SEE 2150.289-D020
NOTES-

LET.	REVISION	ECR	DATE	BY
A	(1) 16GA. was 14GA. (2) 1 1/2 OD was 1 5/8 (3) 4 O.D. was 3 1/2 (4) 1/8 was 14GA. (5) 4 O.D. was 3.25 (6) 1/8 was 14GA. (7) 3 1/2, 1 1/2 was 3.25, 1 5/8	1114	7/11/72	KL

TOLERANCES UNLESS OTHERWISE NOTED
DECIMAL DIMENSIONS 00.00 ± .010, 00.000 ± .003
FRACTIONAL DIMENSIONS UP TO 18" ± 1/64, 18" TO 50" ± 1/32, 50" & OVER ± 1/16
ANGLES ± 0° − 30'
ALL SURFACES 125 TO HAVE FINISH UNLESS OTHERWISE NOTED

KITT PEAK NATIONAL OBSERVATORY
OPERATED BY THE ASSOCIATION OF UNIVERSITIES FOR RESEARCH IN ASTRONOMY, INC. UNDER CONTRACT WITH NATIONAL SCIENCE FOUNDATION

150 INCH STELLAR TELESCOPE — REF. FILE 1179
NAME: DECLINATION AXIS COUNTERWEIGHT — COUNTERWEIGHT DETAIL —
SCALE 1/2
PRINT ISSUED

DESIGNED BY	DATE	APPROVED BY	DATE	DRAWING NUMBER	REV.
BRAUN	11-3-71		11-30-71	2150.289 -D021	A
DRAWN BY BRAUN	DATE 11-3-71	APPROVED BY	DATE		
CHECKED BY W. SMILEY	DATE 12-3-72	APPROVED BY	DATE 11-30-71		

5/71 DIETERICH-POST CLEARPRINT 1020