BILL OF MATERIAL

AURA DRAWING NO.	ITEM	QTY.	MATERIAL	DESCRIPTION	WEIGHT
2150.289-D021	1	1		COUNTERWEIGHT DETAIL	
2150.289-B022	2	8		SLIDE DETAIL	
2150.289-B023	3	8		SLIDE SPT DETAIL	
	4	8		#6-32 SOC HD CAP SCR 3/8 LG #91205D McMASTER-CARR	

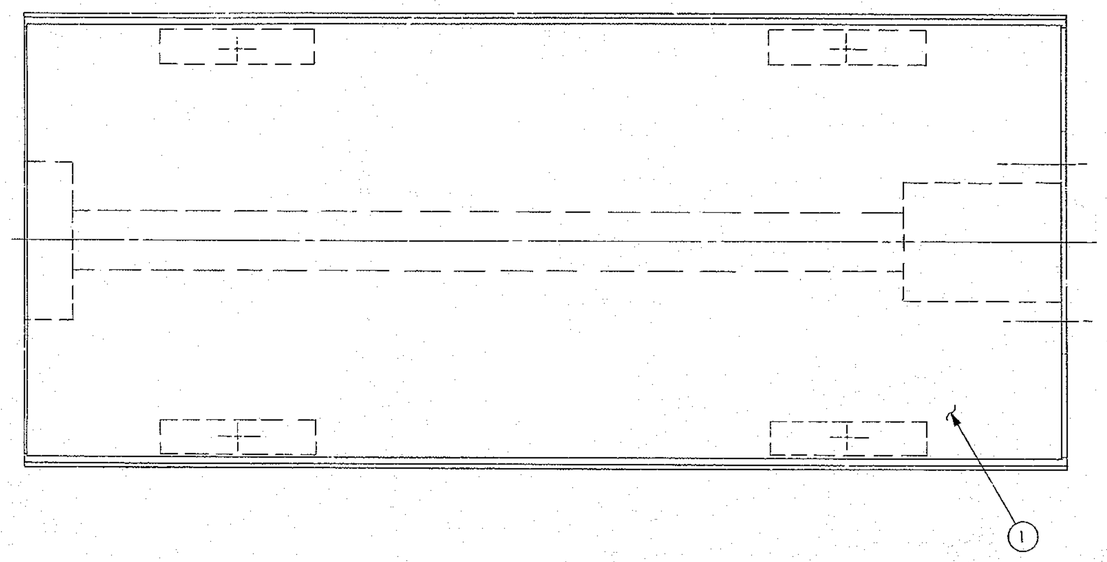

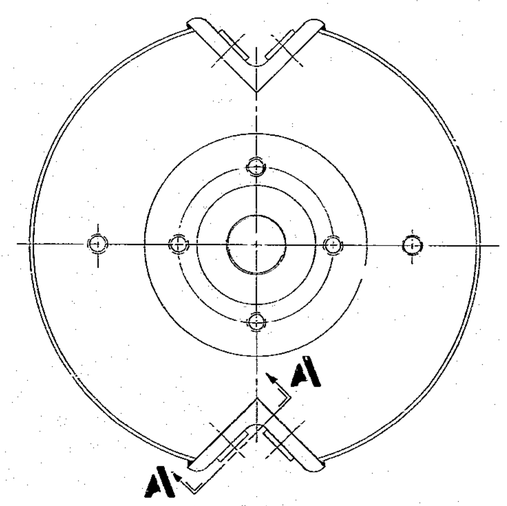

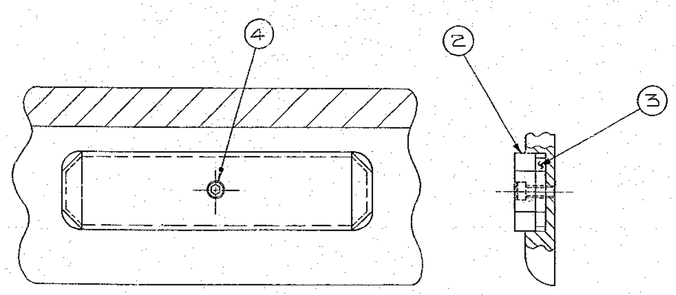

SECTION **A–A**
ROTATED 45° CCW
TYP 8 PLACES
SCALE: 1

6. FOR B/M SEE DWG 2150.289-A020
~~5 BREAK SHARP EDGES~~
~~4 IDENTIFY BY _____ AT LOCATION 4 , "AURA INC. MADE IN U.S.A."~~
~~3 STAMP MATCH MARKS ON ALL MATING PARTS WHERE NECESSARY.~~
~~2 PROJECT DRAWINGS~~
1 FOR NEXT ASSY. SEE 2150.289-E024
NOTES

LET.	REVISION	ECR	DATE	BY

TOLERANCES UNLESS OTHERWISE NOTED
DECIMAL DIMENSIONS
00.00 ± .010
00.000 ± .003
FRACTIONAL DIMENSIONS
UP TO 10" ± 1/64
10" TO 50" ± 1/32
50" & OVER ± 1/16
ANGLES ± 0° 30'
ALL SURFACES TO HAVE 125 √ FINISH UNLESS OTHERWISE NOTED

KITT PEAK NATIONAL OBSERVATORY
OPERATED BY THE
ASSOCIATION OF UNIVERSITIES FOR RESEARCH IN ASTRONOMY, INC.
UNDER CONTRACT WITH
NATIONAL SCIENCE FOUNDATION

150 INCH STELLAR TELESCOPE — REF. FILE 1179
NAME: DECLINATION AXIS COUNTERWEIGHT ASSY — SCALE 1/2 & NOTED — PRINT ISSUED

DESIGNED BY	DATE	APPROVED BY	DATE	DRAWING NUMBER	REV.
BRAUN	11-4-71	[illegible]	11-29-71	2150.289-D020	
DRAWN BY BRAUN	11-4-71	[illegible]	2-9-72		
CHECKED BY J.E.S.	03-72	V.W.	11-30-71		