REVISIONS				
ZONE	LTR	DESCRIPTION	DATE	APPROVED
	A	REVISED PER AURA APPROVED PRINT AND 2150.287E005 SPLIT NOTE 4 SECTIONS AS SHOWN	8-1-68	
	B	REVISED PER AURA APPROVED PRINT	3/3/69	
	C	REVISED PER AURA APPROVED PRINT DATED 12-2-69	12-2-69	
	D	REMOVED (24) 7" DIA. HOLES	3-10-69	
	E	ADDED NOTE 4 & ITEMS 3, REMOVED MAX. FROM AURA DIM. IN SECT. B-B.	3/1/71	
B-2	F	ADDED ITEM 4	5/4/72	
	G	ADDED: WEST SIDE VIEW; TO EAST SIDE VIEW-PN 11, 27 & NOTE CT10 ONLY...; TO SOUTH SIDE VIEW-PN 11, 27 & NOTE CT10 ONLY...; DETAILS A, C, D & E FOR KPNO; TO PLAN VIEW-STA. 1 THRU 24; 2 & 4 - 90° ... HOLES...; 3 & 5 - NORTH & 3 & 8 - NOTE 5. DELETED: END 3 - PN 14 w/ NOTE.	6/7/73	
	H	REVISED HOLE CONFIG.		

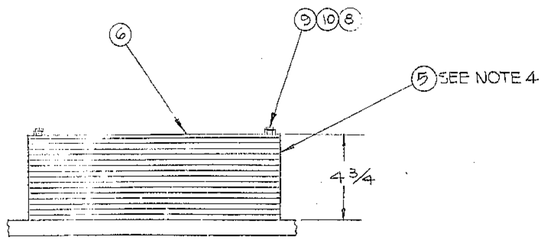

SECTION B-B
SCALE: 1/4
TYP. 24 PLACES

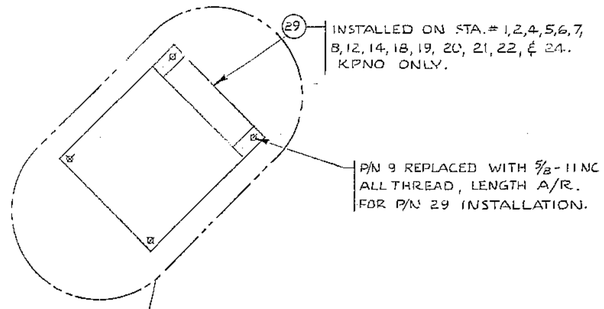

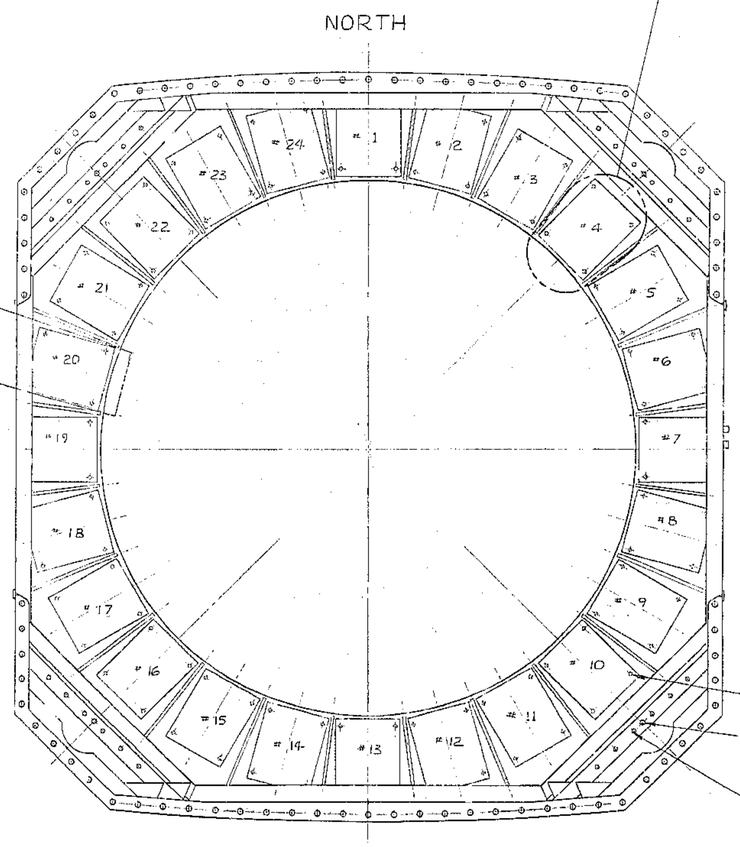

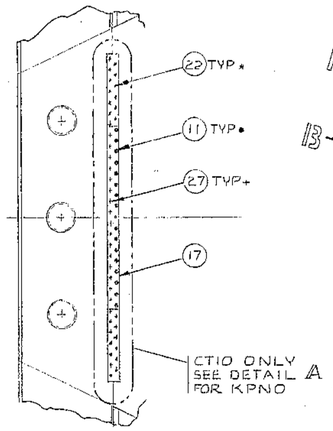

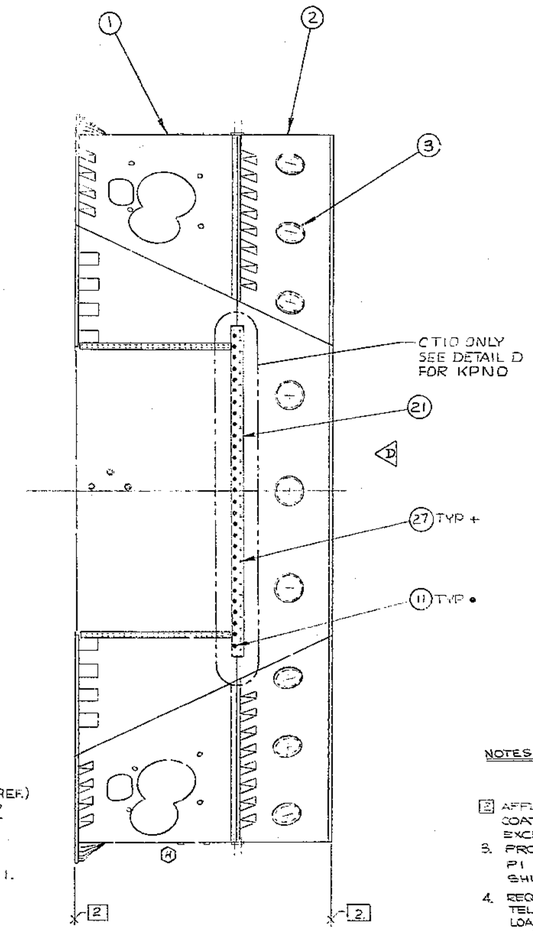

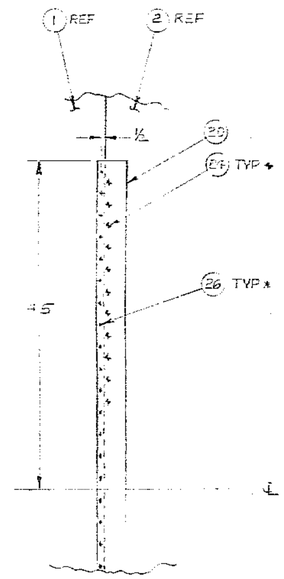

DETAIL D
KPNO ONLY AS BUILT
1/8 SCALE

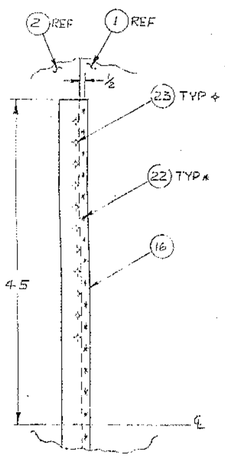

DETAIL A
KPNO ONLY AS BUILT
1/8 SCALE

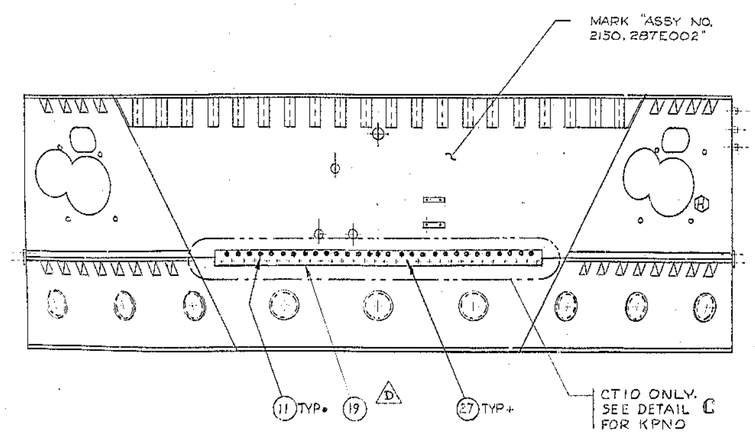

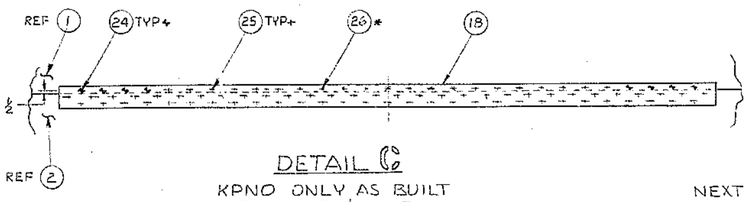

DETAIL C
KPNO ONLY AS BUILT
TYP NORTH & SOUTH
1/8 SCALE

NOTES:

2. APPLY SECOND COAT OF PRIME PAINT AND TWO COATS OF FINISH ENAMEL PER W.G.C. SPEC. NO. 511 EXCEPT SURFACES MARKED 2.
3. PROTECT ALL UNPAINTED SURFACES WITH BRAYCOTE P1 #103 RUST PREVENTATIVE COMPOUND BEFORE SHIPPING.
4. REQUIRED QUANTITY OF ITEM 9 TO BE DETERMINED AT ASSEMBLY OF TELESCOPE TUBE TO OBTAIN BALANCE OF THE TUBE. ITEM 9 IS TO BE LOADED SYMMETRICALLY IN COMPARTMENTS OR AS REQUIRED TO OBTAIN TUBE BALANCE IN ALL PLANES. (KPNO TUBE WILL REQUIRE APPROXIMATELY 13 OF ITEM 9 IN EACH COMPARTMENT AND CT10 TUBE WILL REQUIRE APPROXIMATELY 11 OF ITEM 9 IN EACH COMPARTMENT)
5. PN 4, 11, & 27 GROUND FLUSH WITH INSIDE OF SHELL WITHIN .005".

SEE B/M: 2150.287A002 (W.G.C112921)
NEXT ASSEMBLY: 2150.280E002 (W.G.N102 844)

1178

WESTERN GEAR CORPORATION
CONSTRUCTION PROJECTS DEPARTMENT
APPROVED FOR PROCUREMENT
DATE 11-4-69

FIND NO.	PART NO.	DESCRIPTION	QTY	MATERIAL	CODE IDENT
LIST OF MATERIAL (LM)					

LIMITS ON MACHINED DIMENSIONS EXCEPT AS NOTED
ANGULAR = ± 1° 0'
LINEAR:
X = ± .1 XXX = ± .010
XX = ± .03 FRACTIONAL = ± 1/32
BREAK ALL SHARP EDGES
MATERIAL

150' STELLAR TELESCOPE MOUNTING

DRAWN 5/8/68
CHECK
ENGR

western GEAR CORPORATION
HEAVY MACHINERY DIVISION
EVERETT, WASHINGTON

CASSEGRAIN CAGE SUPPORT SHELL ASSY

W.G.N 103032
APPROVED
CRIG

SIZE E | CODE IDENT NO. 16603 | 2150.287E002 | REV 4
SCALE 1/16 | WT 53800 LB | SHEET 1 OF 1