REVISIONS				
ZONE	LTR	DESCRIPTION	DATE	APPROVED
	A	RELEASED FOR CONST.	11/7/68	

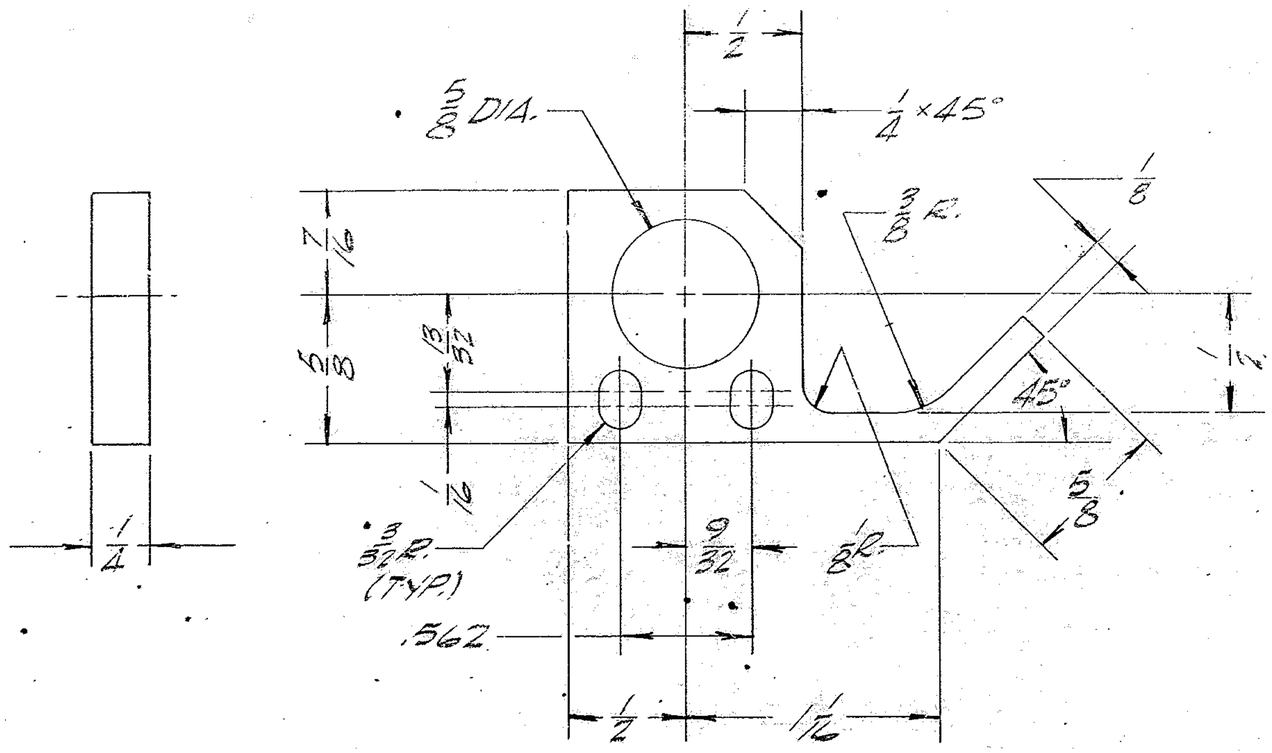

NOTES:

1. ALL DIMENSIONS ARE IN INCHES
2. ALL SURFACES TO BE 125
3. STAMP WITH PART NO. 2150.283C514
4. FLAT BLACK ANODIZE ALL OVER
5. DIMENSIONS APPLY BEFORE ANODIZING.

NUPA, INC. DEC 3 1968 TUCSON, ARIZ. 85711

REF. FILE 1176

NEXT ASSY: 2150.283E502 (W.G.N 102,974)

FIND NO.	PART NO.	DESCRIPTION	QTY	MATERIAL	CODE IDENT

LIST OF MATERIAL (LM)

LIMITS ON MACHINED DIMENSIONS EXCEPT AS NOTED
ANGULAR = ± 1° 0'
LINEAR:
.X = ± .1 .XXX = ± .010
.XX = ± .03 FRACTIONAL = ± 1/32

BREAK ALL SHARP EDGES

MATERIAL: AL. ALLOY 6061-T651 PL 1 1/8 × 5/16 × 4 1/8

150 IN. STELLAR TELESCOPE MTG.

DRAWN R. NIEVES 11/7/68
CHECK R. GRIFFITHS 11/12/68
ENGR

W.G. D107662

APPROVED

western GEAR CORPORATION
HEAVY MACHINERY DIVISION
EVERETT, WASHINGTON

ACTIVATOR - L.S.-OPEN CENTRAL DUST COVER COUDE #3

SIZE	CODE IDENT NO.		REV
C	16603	2150.283C514	A

SCALE 2:1 WT LB SHEET OF

WESTERN GEAR CORPORATION
CONSTRUCTION PROJECTS DEPARTMENT
APPROVED FOR PROCUREMENT
DATE 11/21/68

P1336