REVISIONS				
ZONE	LTR	DESCRIPTION	DATE	APPROVED
	A	REV. PER A.U.R.A. APP'D PRINT	11-14-68	
C2	A	·695 WAS ·734. ·360 WAS ·281		
C4	A	·312 WAS ·250 1/8 RAD WAS 1/4 RAD.		
C3	A	1/2 R WAS 31/32 R 3/4 WAS 1/2		
B4	A	6 9/64 WAS 6 7/64.		
B3	A	3/8 & 7/8 DIM DELETED		
C3	A	2 7/16 ADDED. 3/8 ADDED. 13/16 ADDED		

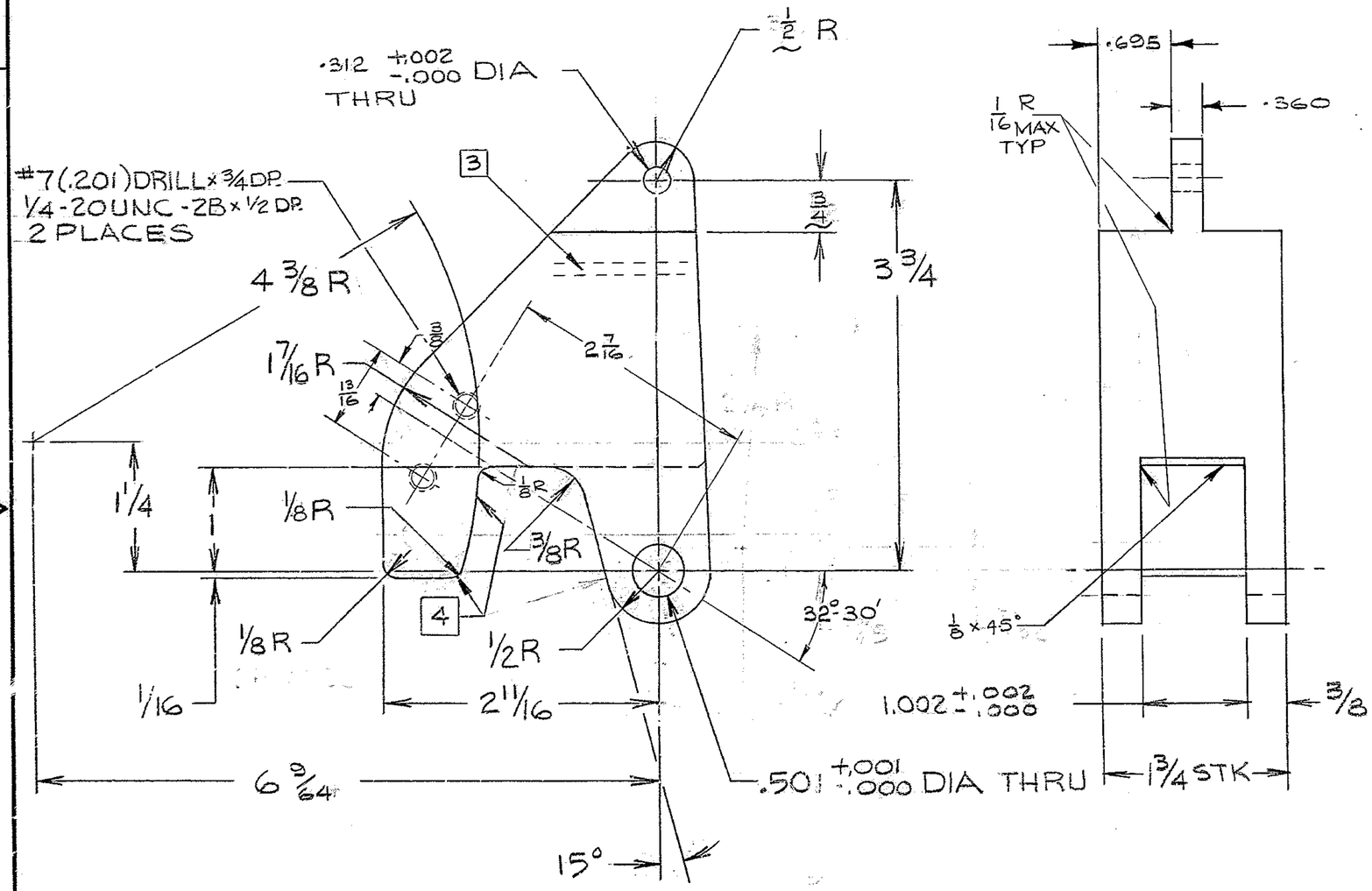

NOTES:
1. ALL DIMENSIONS ARE IN INCHES
2. ALL SURFACES 125
3. STAMP PART NO. 2150.283C403
4. FLAME HARDEN THIS SURFACE ONLY 380 TO 400 BHN

REF. FILE 1176

NEXT ASSY 2150.283 C402 (W.G.D 107,441)

FIND NO.	PART NO.	DESCRIPTION	QTY	MATERIAL	CODE IDENT

LIST OF MATERIAL (LM)

LIMITS ON MACHINED DIMENSIONS EXCEPT AS NOTED
ANGULAR = ± 1° 0'
LINEAR:
.X = ± .1 .XXX = ± .010
.XX = ± .03 FRACTIONAL = ± 1/32
BREAK ALL SHARP EDGES

MATERIAL
STL PL 4 x 4 x 1/4
3 3/16 X 4 3/8 X 1 3/4 STK
AISI-C1045
OR EQUIV.

150 IN STELLAR TELESCOPE MTG

DRAWN	BIRKENDAHL	3-20-68
CHECK	S. Mahlan	5-18-68
ENGR		

W.G.D. 107,442
APPROVED

western GEAR CORPORATION
HEAVY MACHINERY DIVISION
EVERETT, WASHINGTON

LATCH
COUDE #3 ASSY

SIZE	CODE IDENT NO.		REV
C	16603	2150.283C403	A

SCALE 1/1 WT 3.5 LB SHEET 1 OF 1

WESTERN GEAR CORPORATION
CONSTRUCTION PROJECTS DEPARTMENT
APPROVED FOR PROCUREMENT
P.G. DATE 11/22/68

P1336