REVISIONS				
ZONE	LTR	DESCRIPTION	DATE	APPROVED
	A	REVISED PER AURA APPD PRINT	11-6-68	

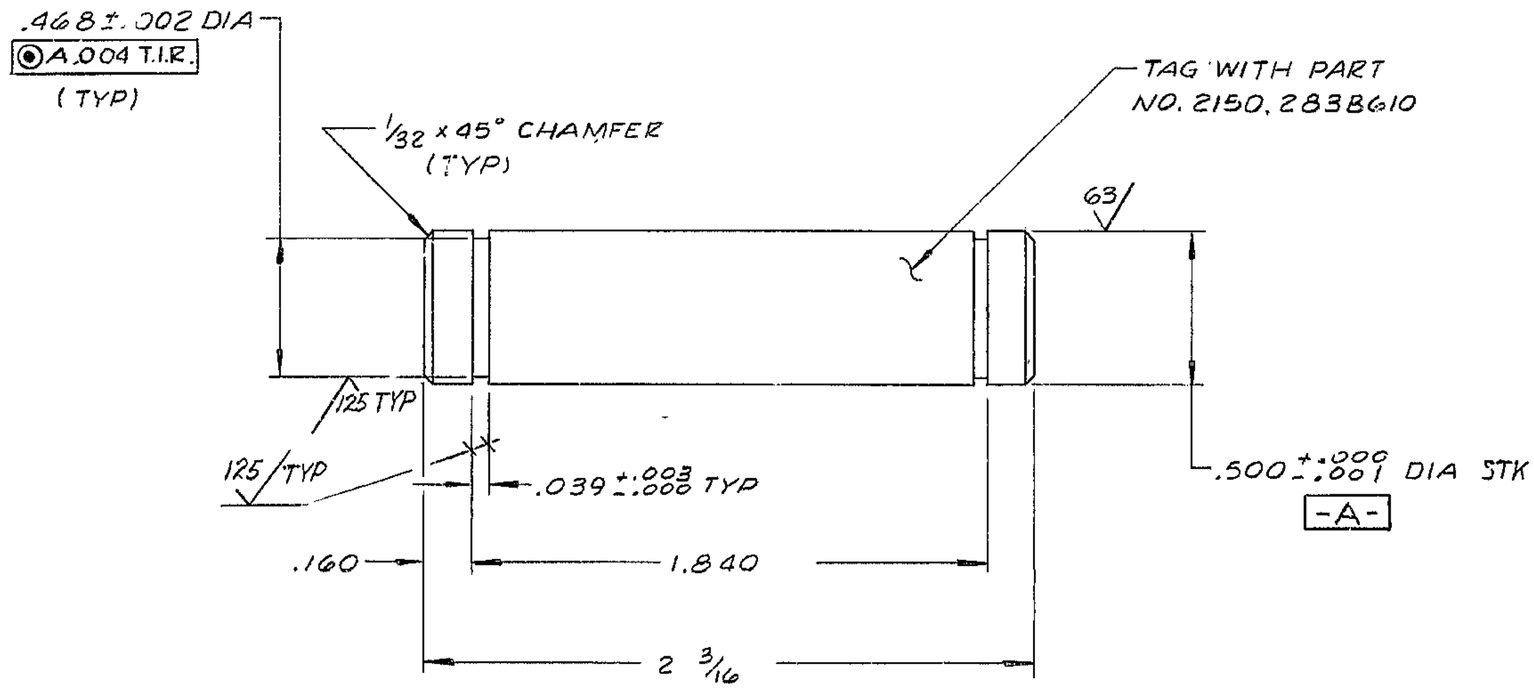

NOTES:

1. ALL DIMENSIONS ARE IN INCHS
2. MATL: STL AISI C1045 PRECISION SHAFTING ½ DIA X 2 3/16 LG

REF. PG 1176

WESTERN GEAR CORPORATION
CONSTRUCTION PROJECTS
DEPARTMENT
APPROVED FOR
PROCUREMENT
PG. DATE 11/21/68

NEXT ASSY: 2150.283E602 (WGN102988)

LIMITS ON MACHINED DIMENSIONS EXCEPT AS NOTED ANGULAR ± 1° 0' LINEAR .X = ± .1 .XX = ± .03 .XXX = ± .010 FRACTIONAL ± 1/32 BREAK ALL SHARP EDGES	150 IN STELLAR TELESCOPE MOUNT DRAWN R. Atassi CHECK ENGR WGC112534 APPROVED	Western GEAR CORPORATION — HEAVY MACHINERY DIVISION, EVERETT, WASHINGTON SHAFT, CAM FOLLOWER COUDE #3 ASSY SIZE B — CODE IDENT NO. 16603 — 2150.283B610 — REV A SCALE 2/1 — WT. LB — SHEET 1 OF 1

P1335