NOTES: UNLESS OTHERWISE SPECIFIED
1. REMOVE ALL BURRS AND SHARP EDGES
2. MACHINED SURFACE ROUGHNESS 125
3. MATL: SEE B/M
4. FINISH FRAME & PAINT FLAT BLACK
5. CENTER PANNEL (ITEM 3) IN FRAME. APPLY SEALANT ACHEIVE ALL AREOUND, BETH SIDES.
6. #10 DRILL AT ASSY, LOCATE FROM PART NO. 4 & 5 AS SHOWN

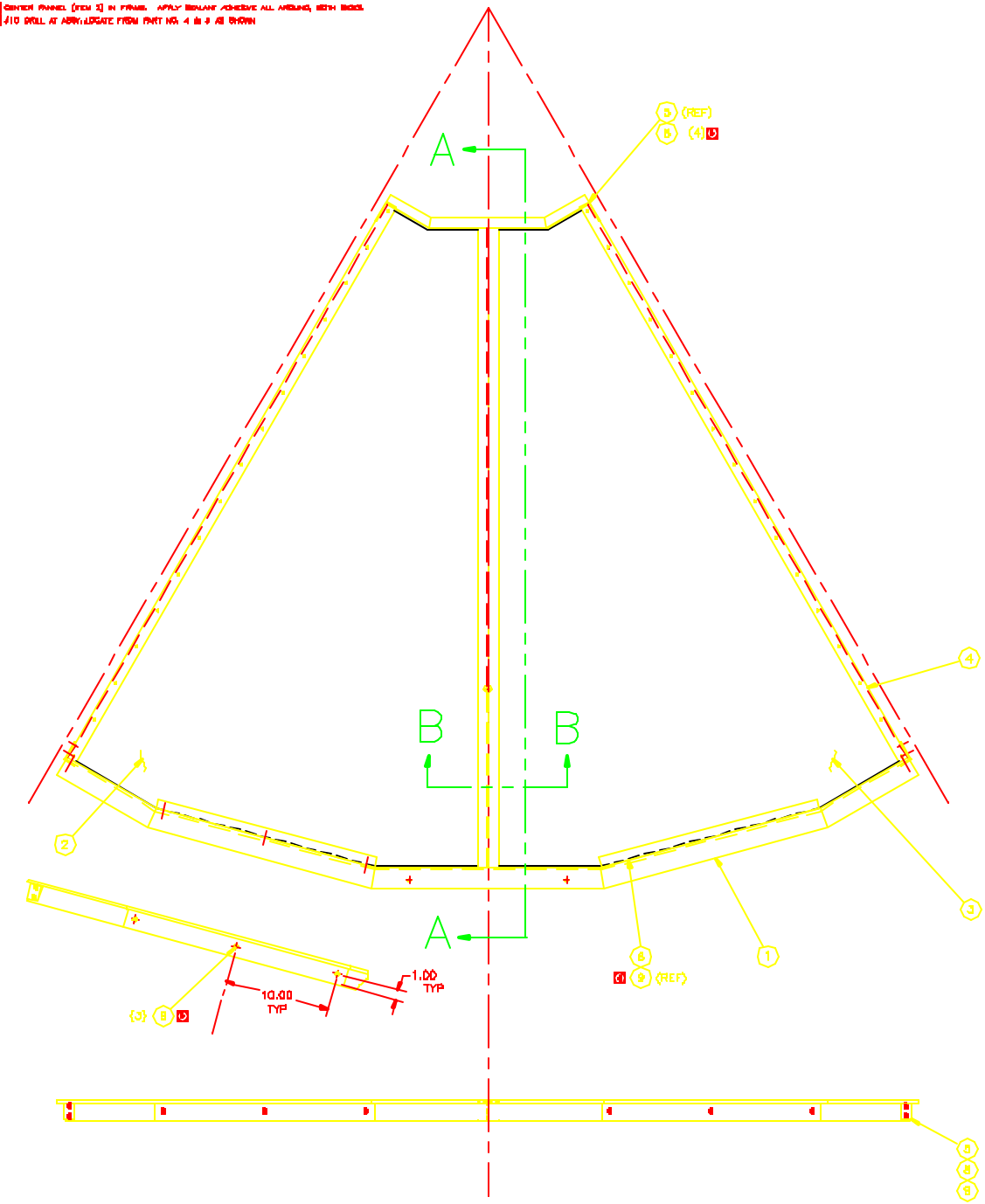

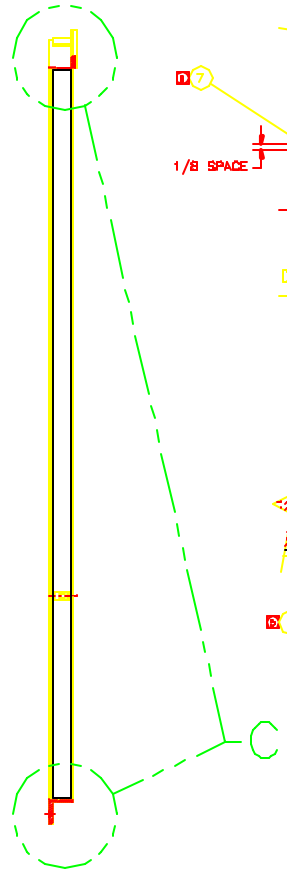

SECTION A—A

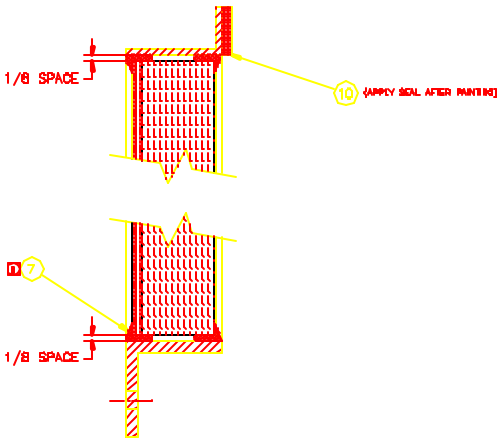

DETAIL C
SCALE: FULL

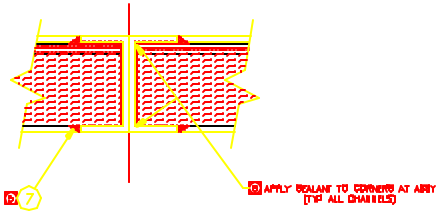

SECTION B—B
SCALE: FULL

ITEM NO.	PART NO.	DESCRIPTION	QTY	ITEM NO.
20				20
19				19
18				18
17				17
16				16
15				15
14				14
13				13
12				12
11				11
10	8813068	1/4 x 1 CLOSED CELL FOAM MEMASTER CARR	7	10
9		3/16 DIA X .09 GRIP BLIND RIVET BBT	9	9
8		3/16 DIA X .29 GRIP BLIND RIVET BBT	8	8
7		ELASTIC SEALANT ADHESIVE-BLACK,PAINTABLE	7	7
6	2150.281A028-1	2x1x1/8X 1.5 LG ARCH. GRADE ALUM CHANNEL	6	6
5	2150.281A046	CORNER BRACKET	5	5
4	2150.281E047	FRAME-OUTER	4	4
3	2150.281E041-2	PANEL	3	3
2	2150.281E041-1	PANEL	2	2
1	2150.281E021	FRAME-INNER	1	1

REVISIONS					
REV	LTR	DESCRIPTION	CHK	DWN	DATE

TOLERANCES UNLESS OTHERWISE NOTED
DECIMALS .XX ± .03 .XXX ± .010
FRACTIONS ± —
ANGULAR ± 0°30'

NATIONAL OPTICAL ASTRONOMY OBSERVATORIES
OPERATED BY AUI
UNIVERSITY OF CALIFORNIA, ASSOCIATED IN COOPERATION
UNDER CONTRACT AST-8011 WITH
NATIONAL SCIENCE FOUNDATION

NEXT ASSEMBLY: 2150.281E002
NAME: MIRROR COVER PETAL ASSY
SIZE: A
CAGE CODE: 1176
SCALE: 1/4
WEIGHT: AUTOCAD 0.14
DATE: 12/8/98
DWG NO: 2150.281E020
REV:
SHEET 1 OF 1