REVISIONS				
ZONE	LTR	DESCRIPTION	DATE	APPROVED
	A	REVISED PER AURA APPD PRINT, APPD FOR CONS'T 9-20-68	10-28-68	
	B	DESCRIPTION WAS: SELSYN MOTOR	12-24-68	
	C	GENERAL REVISION A/C PULLEY REVERSAL.	4-17-70	S.
	D	2.348 WAS 2.346 2.881/2.877 WAS 2.8755/2.8765 — AS BUILT	2-28-73	LDS

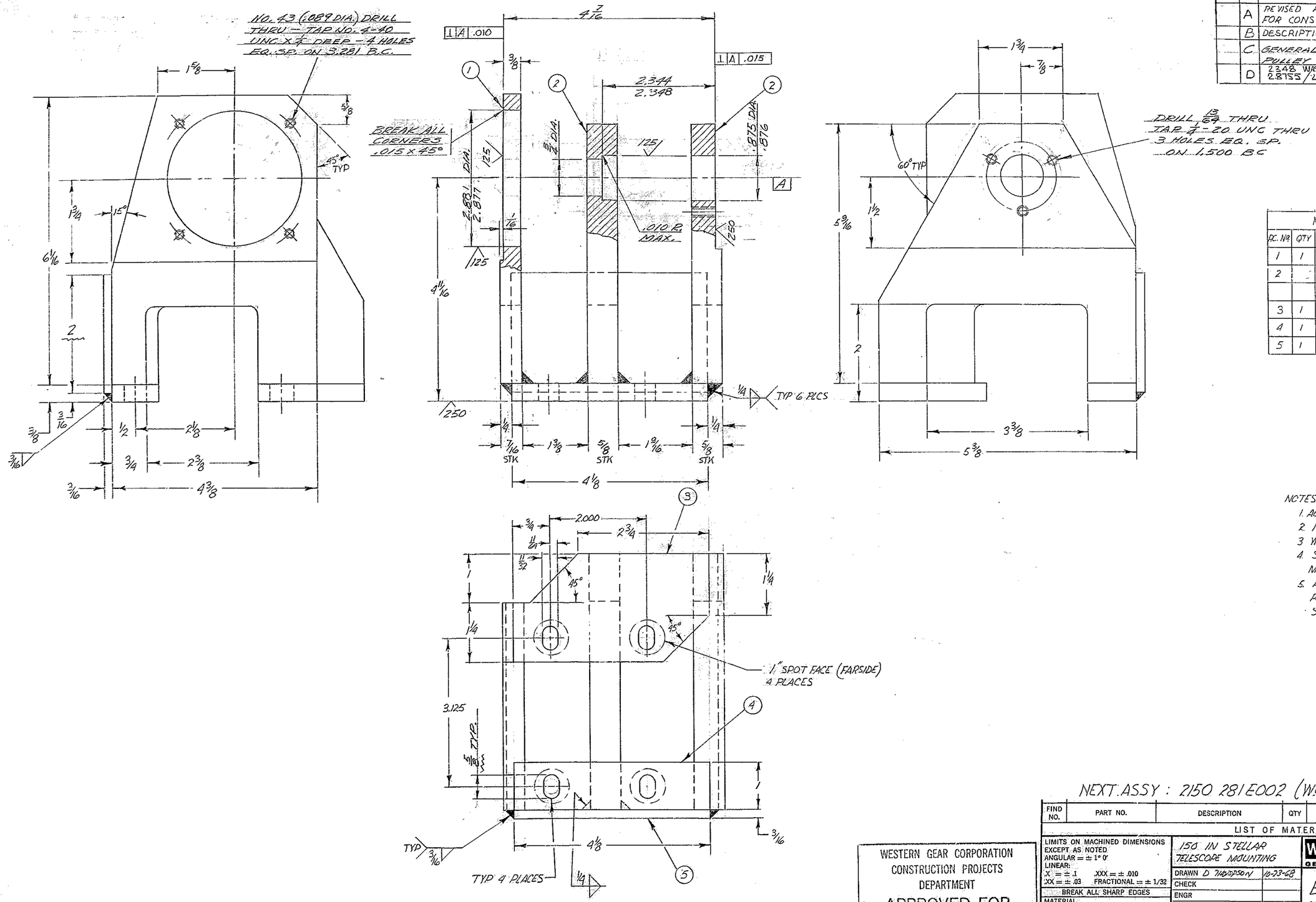

MATERIAL LIST				
PC. №	QTY	DESCRIPTION	MATL & SPEC	WT
1	1	PL 4 3/8 X 7/16 X 6 1/16	STL ASTM A-36	3.3
2	1	PL 5 9/16 X 5/8 X 5 3/8		5.3
3	1	PL 2 1/4 X 7/16 X 4 1/8		1.2
4	1	PL 1 X 7/16 X 4 1/8		.5
5	1	PL 2 X 3/16 X 4 1/8		.5

NOTES:
1. ALL DIMENSIONS ARE IN INCHES
2. NEAT BURN CONTOUR PCS. 1,2,3,4,
3. WELD PER WGC SPEC 752 APPENDIX T1
4. STRESS RELIEVE AFTER WELDING & BEFORE MACHINING PER WGC SPEC 510
5. APPLY ONE COAT OF PRIME PAINT ALL OVER PER WGC SPEC 511 IMMEDIATELY AFTER STRESS RELIEVING & CLEANING

REF. 1175

NEXT ASSY: 2150 281 E002 (W.G.N 103,002)

FIND NO.	PART NO.	DESCRIPTION	QTY	MATERIAL	CODE IDENT

LIST OF MATERIAL (LM)

WESTERN GEAR CORPORATION
CONSTRUCTION PROJECTS DEPARTMENT
APPROVED FOR PROCUREMENT
P.G. DATE 11/21/68

LIMITS ON MACHINED DIMENSIONS EXCEPT AS NOTED
ANGULAR = ± 1° 0'
LINEAR:
.X = ± .1 .XXX = ± .010
.XX = ± .03 FRACTIONAL = ± 1/32
BREAK ALL SHARP EDGES
MATERIAL
SEE MATL LIST

150 IN STELLAR TELESCOPE MOUNTING

DRAWN D. THOMPSON 10-23-68
CHECK
ENGR
W.G.E. 107838
APPROVED

WESTERN GEAR CORPORATION
HEAVY MACHINERY DIVISION
EVERETT, WASHINGTON

BRACKET, POTENTIOMETER CENT. SECT. & P.M. COVER ASSY

SIZE	CODE IDENT NO.		REV
D	16603	2150.281 D090	D

SCALE 1/1 WT 10.5 LB SHEET 1 OF 1