REVISIONS				
ZONE	LTR	DESCRIPTION	DATE	APPROVED
	A	APP'D PER AURA CONSTRUCTION PRINT 20/8/68	10/23/68	
D3 B4	B	3.344 WAS 3.094 5 WAS 4 3/4, 3/4 WAS 5/8	5/14/71	JW

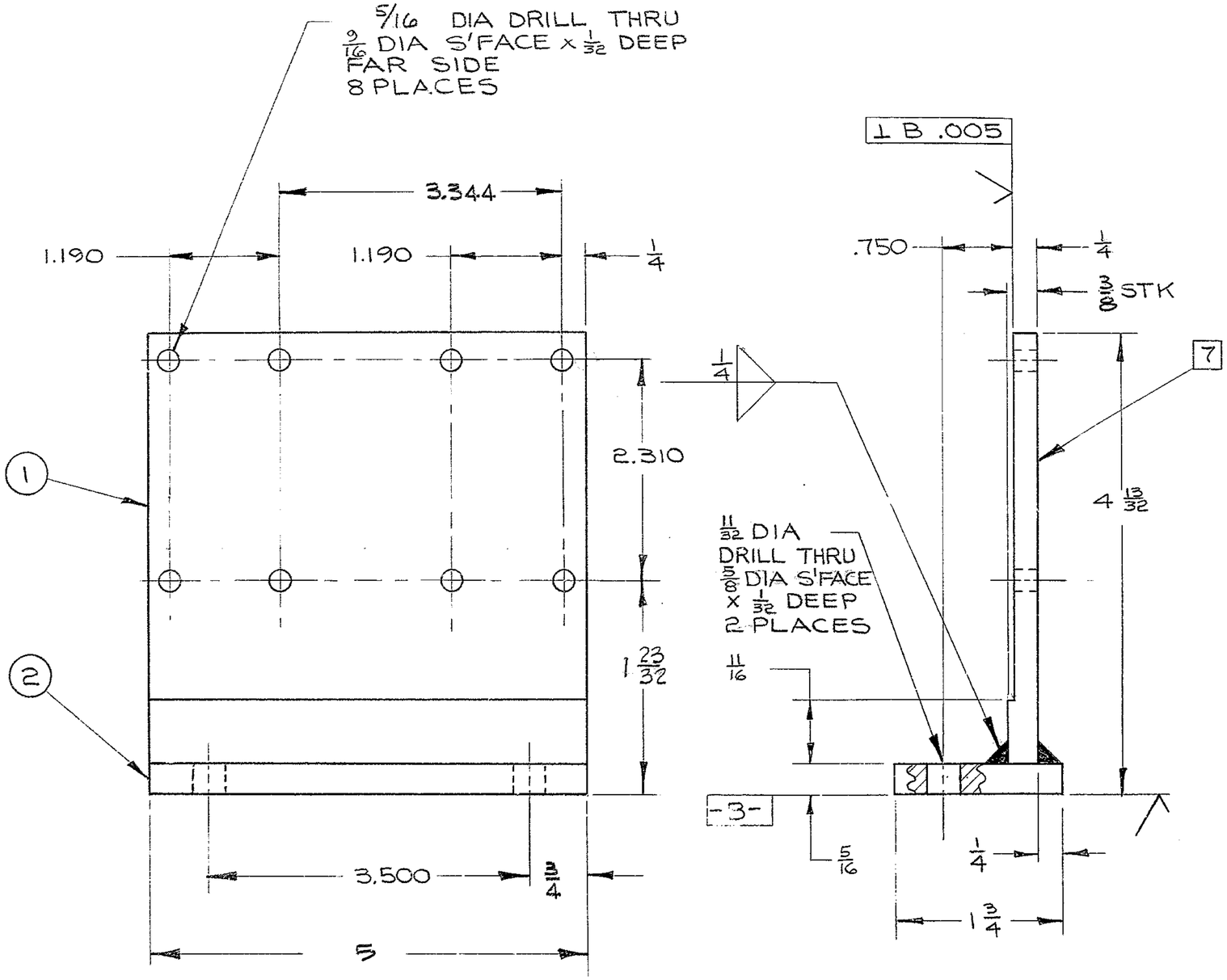

MATERIAL LIST				
PC. NO.	QTY	DESCRIPTION	MAT'L & SPEC	ROUGH WT
1	1	PL 4 3/32 x 3/8 x 5	STL ASTM A-36	1.7
2	1	PL 1 3/4 x 1/2 x 5	STL ASTM A-36	.9

NOTES:
1. ALL DIMENSIONS IN INCHES
2. FABRICATION TOLERANCE ± 1/16
3. WELD PER W.G.C. SPEC NO. 752 APPENDIX T-1
4. STRESS RELIEVE AFTER WELDING & BEFORE MACHINING PER W.G.C. SPEC. NO. 510
5. APPLY ONE COAT OF PRIME PAINT ALL OVER PER W.G.C. SPEC NO. 511 IMMEDIATELY AFTER STRESS RELIEVING & CLEANING
6. ALL SURFACES MARKED ✓ TO BE 125 ✓ EXCEPT AS NOTED.
7. STAMP P/N 2150.281C039

REF. FILE 1175

NEXT ASSY 2150.281E002 (W.G.N 103,002)

FIND NO.	PART NO.	DESCRIPTION	QTY	MATERIAL	CODE IDENT

LIST OF MATERIAL (LM)

LIMITS ON MACHINED DIMENSIONS EXCEPT AS NOTED
ANGULAR = ± 1° 0'
LINEAR:
.X = ± .1 .XXX = ± .010
.XX = ± .03 FRACTIONAL = ± 1/32
BREAK ALL SHARP EDGES
MATERIAL

150 IN STELLAR TELESCOPE MOUNTING

DRAWN	SESSIONS	8/5/68
CHECK	[illegible]	8-15-68
ENGR		

W.G. D107533
APPROVED

Western GEAR CORPORATION
HEAVY MACHINERY DIVISION
EVERETT, WASHINGTON

BRACKET, LIMIT SWITCH CENT. SEC. & P.M. COVER ASSY

SIZE	CODE IDENT NO.		REV
C	16603	2150.281C039	B

SCALE FULL WT 2.6 LB SHEET 1 OF 1

APPROVED FOR PROCUREMENT
P.G. DATE 1/21/68

P1336