THIS DOCUMENT CONTAINS INFORMATION PROPRIETARY TO WESTERN GEAR CORPORATION. ALL DESIGN, MANUFACTURING, REPRODUCTION, USE, PATENT, AND SALES RIGHTS REGARDING THE SAME ARE HEREBY EXPRESSLY RESERVED BY WESTERN GEAR CORPORATION. THIS DOCUMENT IS SUBMITTED FOR REFERENCE PURPOSES ONLY AND SHALL NOT BE DISCLOSED TO ANY UNAUTHORIZED PERSON OR INCORPORATED INTO ANY OTHER PROJECT.

REVISIONS				
ZONE	LTR	DESCRIPTION	DATE	APPROVED
	A	RELEASED FOR MANUFACTURE		

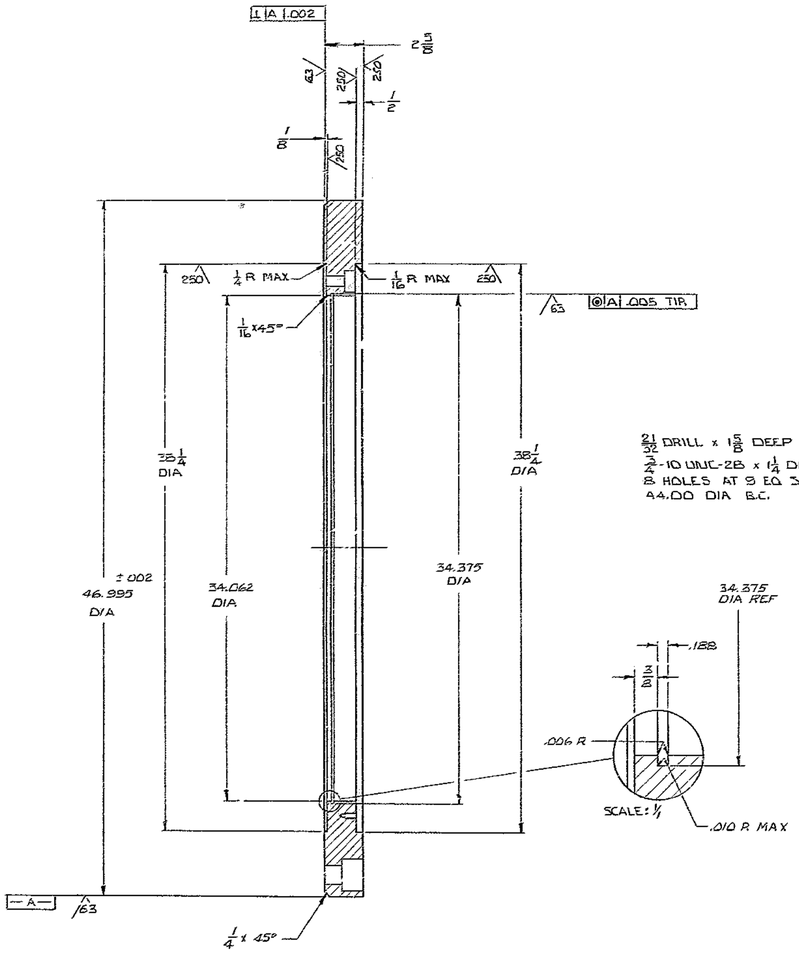

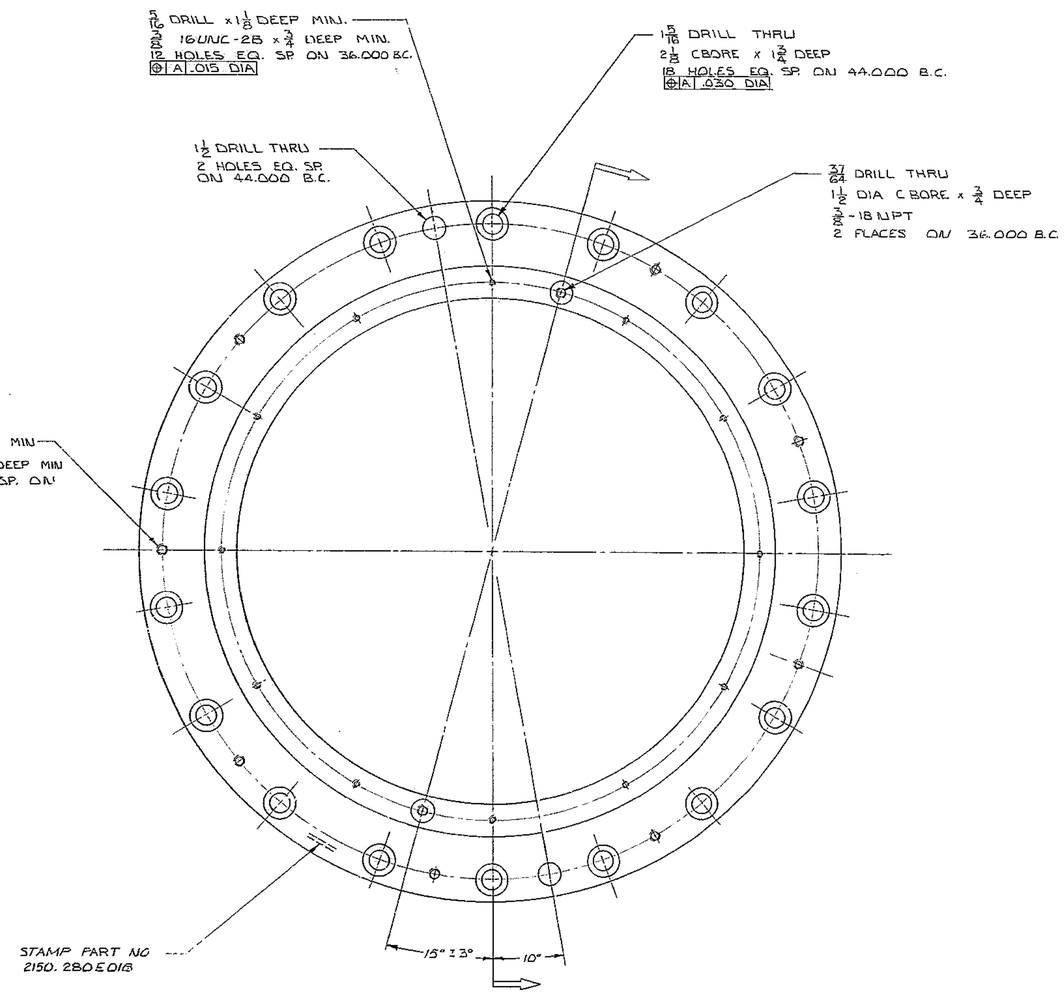

NOTE
1. ALL DIMENSIONS ARE IN INCHES.
2. FINISH 125/ ALL OVER EXCEPT AS NOTED.

NEXT ASSY 2150.280E002 (WG N102844)

REF. FILE 1174

FIND NO.	PART NO.	DESCRIPTION	QTY	MATERIAL	CODE IDENT

LIST OF MATERIAL (LM)

LIMITS ON MACHINED DIMENSIONS EXCEPT AS NOTED
ANGULAR = ± 1° 0'
LINEAR:
X = ± .1 XXX = ± .010
XX = ± .03 FRACTIONAL = ± 1/32
BREAK ALL SHARP EDGES
MATERIAL
STL ASTM A-7 OR EQ.
PL 47 1/2 O.D. 33 1/2 I.D.
2 3/4 THK

DRAWN SKILES 8/7/70
CHECK
ENGR
W.G N103280
APPROVED

WESTERN GEAR CORPORATION
HEAVY MACHINERY DIVISION
EVERETT, WASHINGTON

RETAINER OUTER RACE
WEST D.A. BEARING
CENTER SECTION

SIZE	CODE IDENT NO.		REV
E	16603	2150.280E018	A

SCALE 1/4 WT LB SHEET 1 OF 1