REVISIONS				
ZONE	LTR	DESCRIPTION	DATE	APPROVED
	A	APP'D FOR CONSTRUCTION PER ADEA	9/30/68	
C-4	B	ADDED 2 1 1/2 DIA HOLES & LOC. DIMS	8-6-70	

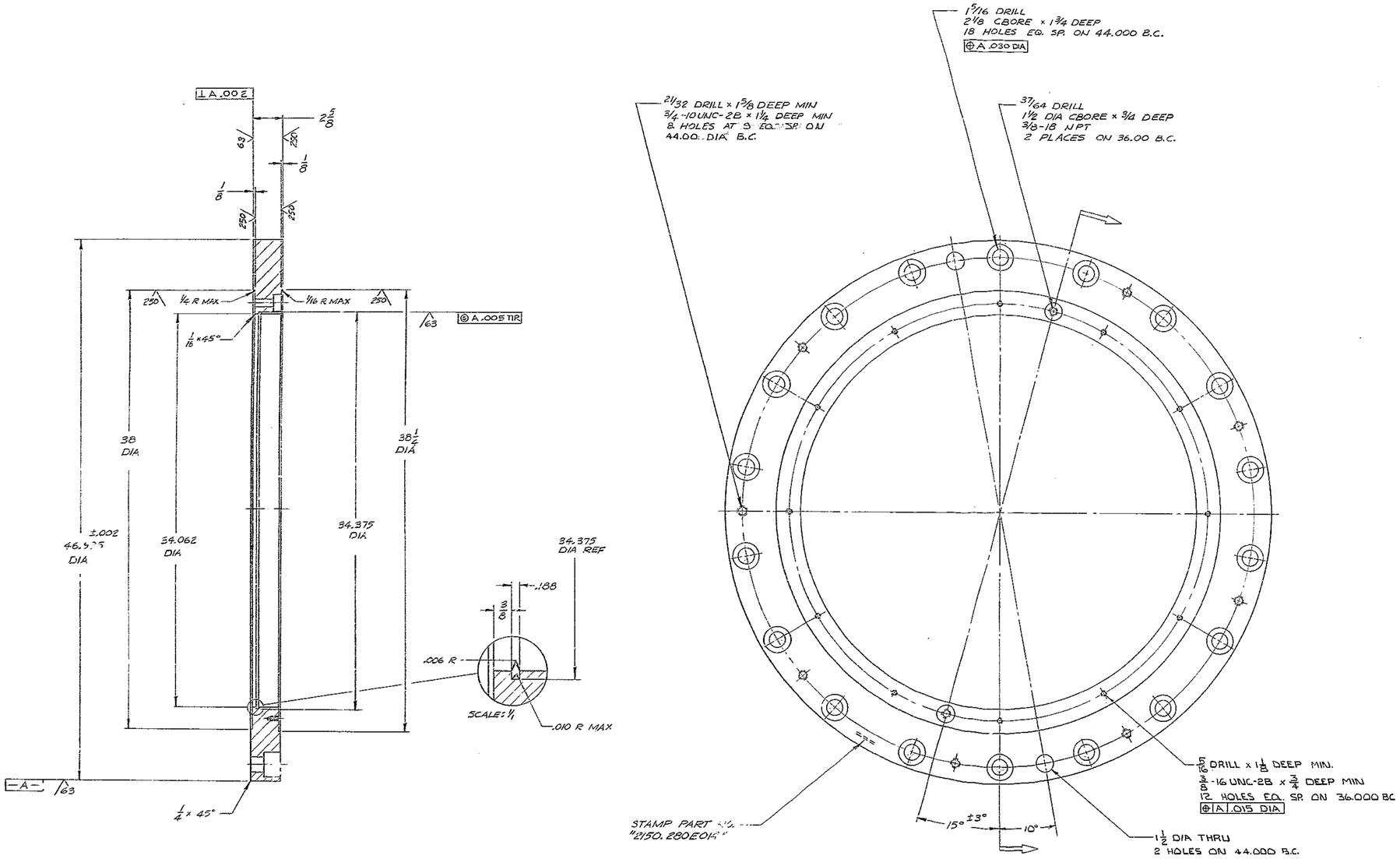

NOTE:
1. ALL DIMENSIONS ARE IN INCHES.
2. FINISH 125√ ALL OVER EXCEPT AS NOTED.

NEXT ASSY 2150.280E002 (W.G.N 102844)

REF. FILE 1174

FIND NO.	PART NO.	DESCRIPTION	QTY	MATERIAL	CODE IDENT
		LIST OF MATERIAL (LM)			

WESTERN GEAR CORPORATION
CONSTRUCTION PROJECTS
DEPARTMENT
APPROVED FOR
PROCUREMENT
DATE 9/20/68

LIMITS ON MACHINED DIMENSIONS EXCEPT AS NOTED
ANGULAR = ± 1° 0'
LINEAR:
.X = ± .1 .XXX = ± .005
.XX = ± .03 FRACTIONAL = ± 1/32
BREAK ALL SHARP EDGES
MATERIAL
STL, ASTM A-7 OR EQ.
PL 47 1/2 O.D. 33 1/2 I.D.
2 3/4 THK

150 IN STELLAR
TELESCOPE MOUNTING

DRAWN E.R. 6/3/68
CHECK Gene Russo 7 Aug 68
ENGR

W.G. N 102967
APPROVED

Western GEAR CORPORATION
HEAVY MACHINERY DIVISION
EVERETT, WASHINGTON

RETAINER, OUTER RACE,
D. A. BEARING –
CENTER SECTION

SIZE	CODE IDENT NO.		REV
E	16603	2150.280E014	B

SCALE 1/4 WT LB SHEET 1 OF