NOTES: UNLESS OTHERWISE SPECIFIED
1. REMOVE ALL BURRS AND SHARP EDGES
2. MACHINED SURFACE ROUGHNESS 125
3. MAT'L: #24 GA (.025) GALVANIZED STEEL SHEET
4. FINISH

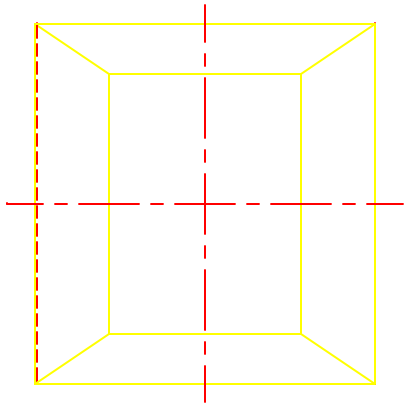

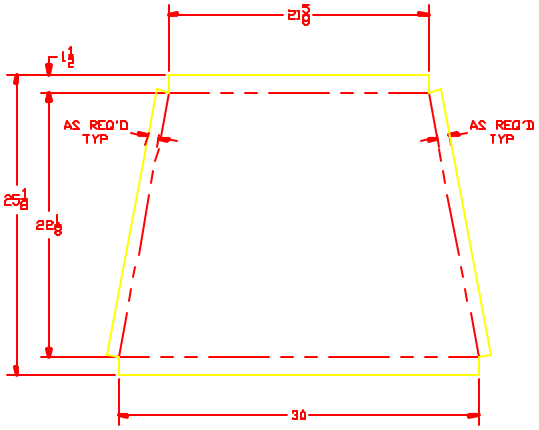

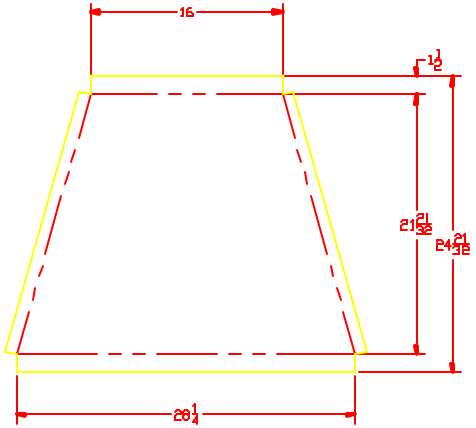

DEVELOPMENT

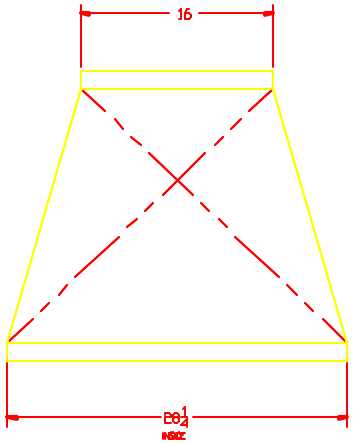

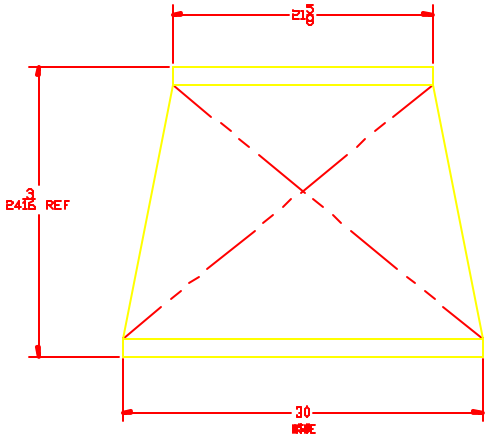

NATIONAL OPTICAL ASTRONOMY OBSERVATORIES			
NEXT ASSEMBLY: 2159.267E001	NAME: DUCT-REDUCER COOLER TO BLOWER		DWG FILE: 1171
SCALE: 1/4			2159.267E013