NOTES: UNLESS OTHERWISE SPECIFIED
1. REMOVE ALL BURRS AND SHARP EDGES .030
2. MACHINED SURFACE ROUGHNESS 125
3. MAT'L: 3/16 THK ALUMINUM ALLOY 6061-T6
4. FINISH: BLACK ANODIZE

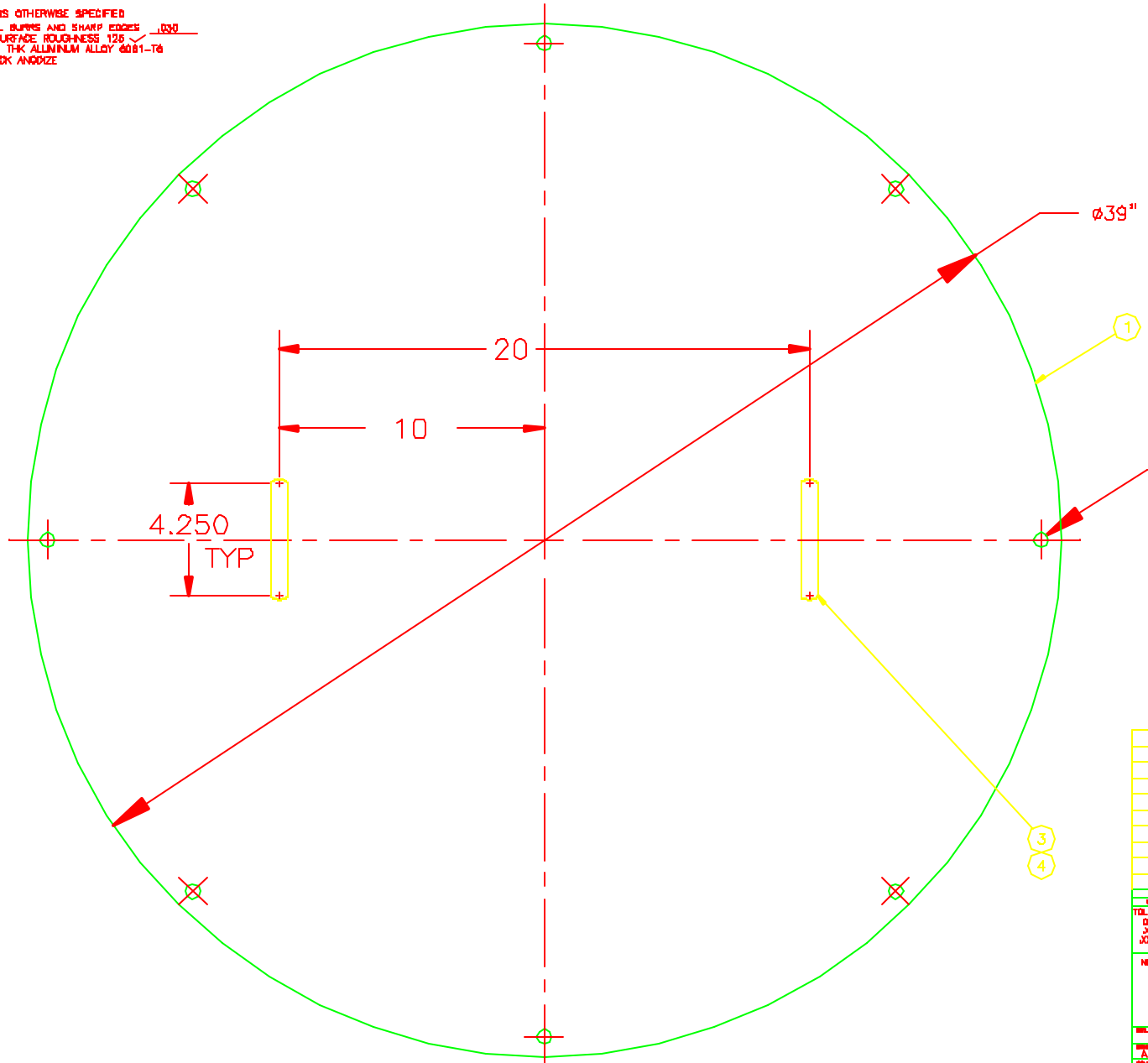

REVISIONS					
ZONE	LTR	REVISIONS	BY	DATE	APPV

				10
				9
				8
				7
				6
				5
4		#8-32 X 1/2LG BUTTON HD SOC CAP SCR STL		4
2	B1228-12	HANDLE-OVAL USECO		3
				2
1	2150.267D008-1	3/16 THK X 39" DIA ALUM ALLOY 6061-T6		1
BY NAME	DWG OR SPECIFICATION NO	DESCRIPTION	MATERIAL	REQ'D

TOLERANCES UNLESS OTHERWISE NOTED
DECIMALS .XX ± .03 .XXX ± .010
FRACTIONS ± –
ANGULAR ± 0.50°

NATIONAL OPTICAL ASTRONOMY OBSERVATORIES
OPERATED BY THE
ASSOCIATION OF UNIVERSITIES FOR RESEARCH IN ASTRONOMY
UNDER COOPERATIVE AGREEMENT WITH
NATIONAL SCIENCE FOUNDATION

NEXT ASSEMBLY: 2150.267E001

NAME: COVER

SIZE FILE: 1171

USED ON:

SCALE: 1/2 SHOWTED
SOFTWARE: AUTOCAD V.14
DRAWN BY: J.ROEY 7/20/99
2150.267D008
REV
SHEET OF