NOTES: UNLESS OTHERWISE SPECIFIED
1. REMOVE ALL BURRS AND SHARP EDGES .030
2. MACHINED SURFACE ROUGHNESS 125
3. MAT'L: 1/8 THK NEOPRENE SHEET

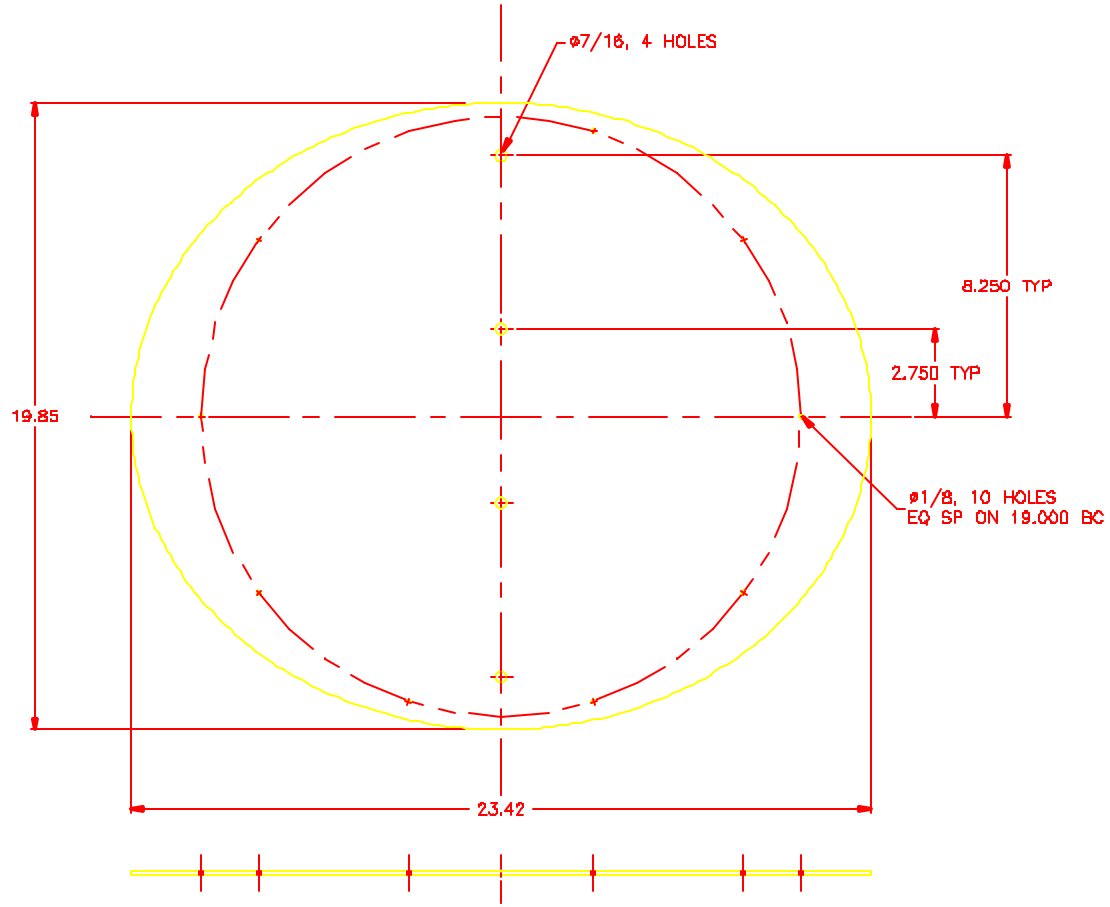

REVISIONS					
ZONE	LTR	REVISIONS	EDN	DATE	BY	APPV

TOLERANCES UNLESS OTHERWISE NOTED
DECIMALS .XX ± .03 .XXX ± .010
FRACTIONS ± –
ANGULAR ± 0.50°

NATIONAL OPTICAL ASTRONOMY OBSERVATORIES
OPERATED BY THE
ASSOCIATION OF UNIVERSITIES FOR RESEARCH IN ASTRONOMY
UNDER COOPERATIVE AGREEMENT WITH
NATIONAL SCIENCE FOUNDATION

NEXT ASSEMBLY: 2150.267D003

NAME: DAMPER RUBBER

SIZE: 1/2
SOFTWARE: AUTOCAD v.14
DRAWN BY: J.FOLEY 06/12/97
SHEET: 1/1
2150.267D004
REV