REVISIONS				
ZONE	LTR	DESCRIPTION	DATE	APPROVED
	A	REVISED & REL FOR MANF. PER AURA	4/18/69	
C-B	B	ADDED ½ DIM	6-12-69	
	C	ADDED AS BUILT WT	3/21/70	

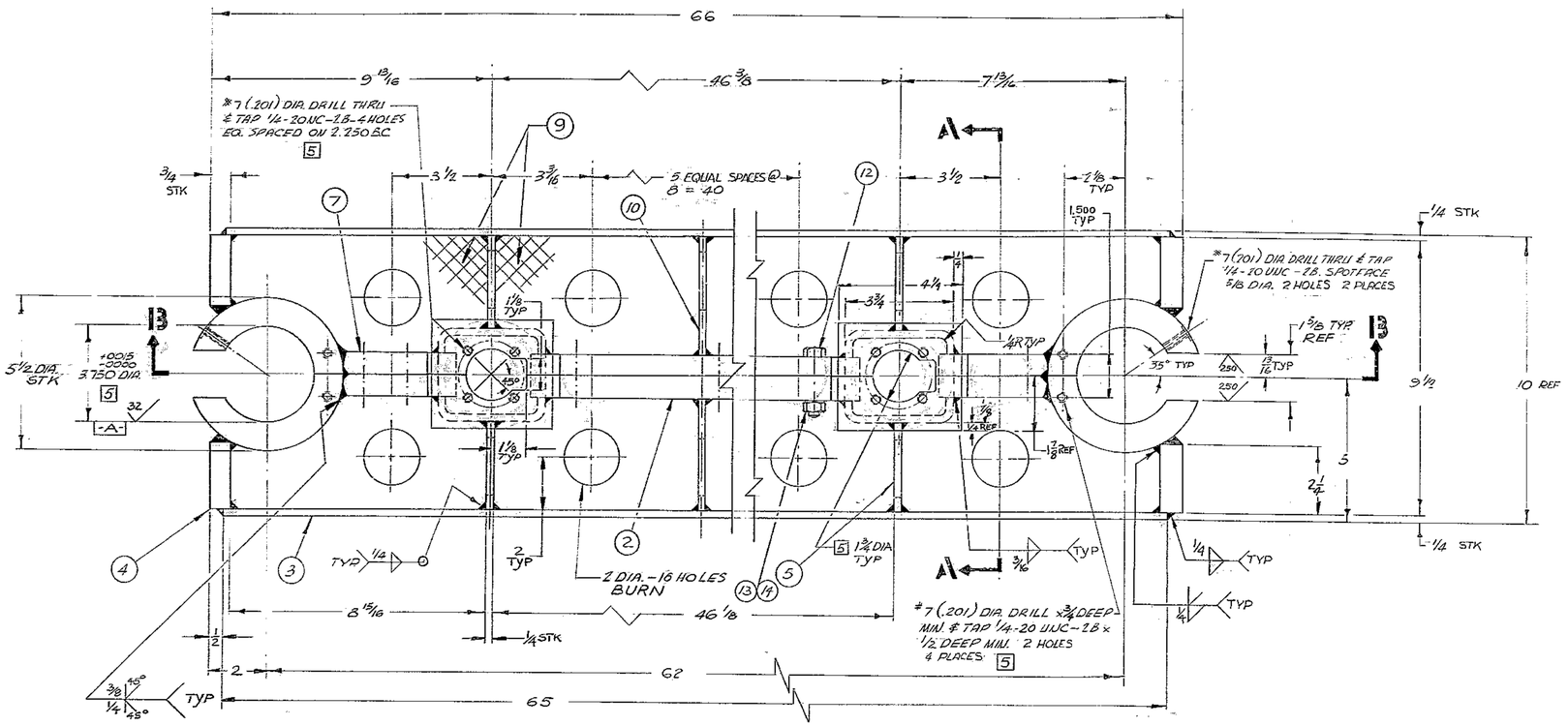

NOTES:

1. FABRICATION TOLERANCE EXCEPT AS NOTED:
   UP TO 10 INCHES ± 1/16"
   10" TO 50 INCHES ± 1/8"
   50 INCHES & OVER ± 1/4
2. WELD PER WGC. SPECIFICATION 752, APPENDIX TI
3. STRESS RELIEVE AFTER WELDING & BEFORE MACHINING PER WGC SPECIFICATION 510
4. APPLY ONE COAT OF PRIME PAINT ALL OVER PER WGC. SPECIFICATION 511 IMMEDIATELY AFTER STRESS RELIEVING AND CLEANING.
5. TO BE MATCH MACHINED WITH BOTH HALVES CLAMPED & PINED TOGETHER
6. ALL DIMENSIONS IN INCHES
7. ANTIMONY 6%, LEAD 94%, DENSITY = 0.393 #/IN³ TOTAL WEIGHT INCLUDING STL REINFORCEMENT PLATE TO BE 2420# CAST IN PLACE TO DIMENSIONS INDICATED. AS BUILT WT 2310 ± 20 lb

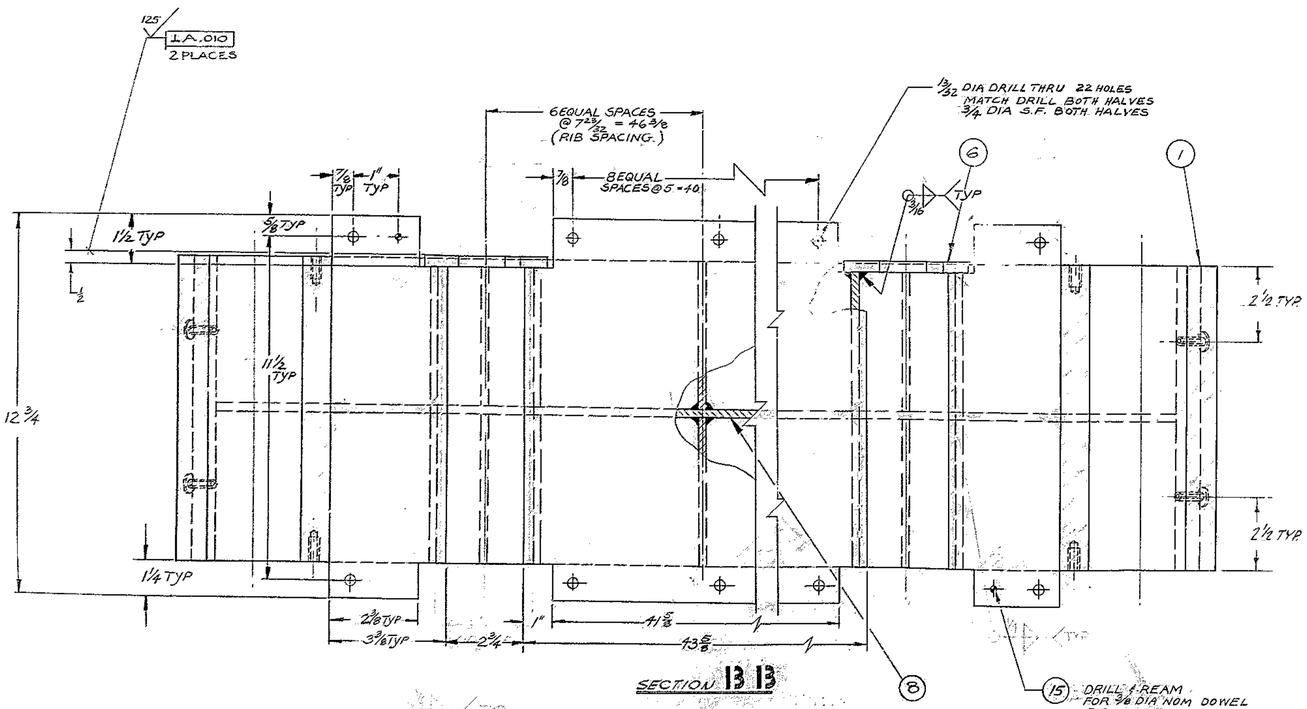

SECTION B B

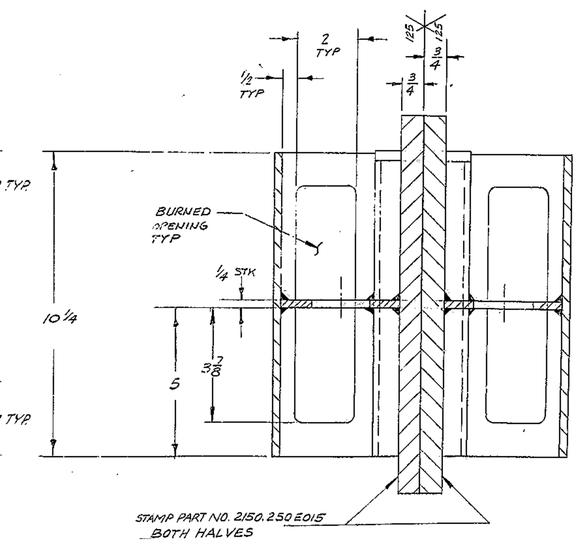

SECTION A A
ROTATED 90° CW

MATERIAL LIST				
PC. NO	QTY	DESCRIPTION	MAT'L & SPEC.	ROUGH WT
1	2	TUBE 5½ OD x 11/16 WALL x 10 1/4 LG	STL. AISI MT 1015 OR EQ	39
2	2	PL 43 3/4 x 12 3/4 x 1" THK	STL ASTM A-36	138
3	2	PL 65 x 1/4 x 10 1/4	STL ASTM A-36	47
4	4	PL 2 1/4 x 3/4 x 10 1/4	STL ASTM A-36	5
5	8	PL 3 1/8 x 1/4 x 5	STL ASTM A-36	1½
6	4	PL 2 1/8 x 4 1/2 x 5/8 THK	STL ASTM A-36	1
7	4	PL 3 3/8 x 12 3/4 x 1" THK	STL ASTM A-36	12
8	2	PL 64 1/2 x 1/4 x 4	STL ASTM A-36	29
9	AS REQD	COUNTERWEIGHT	7	
10	20	PL 5 x 4 x 1/4	STL ASTM A-36	1
11	4	PL 4 3/4 x 10 x 1/4	STL ASTM A-36	3
12	22	SCREW, HEX. HD. CAP 3/8-16 UNC-2A x 2 1/4	STL CAD PL	
13	22	NUT, HEX. 3/8-16 UNC-2B	STL CAD PL.	
14	22	WASHER, LOCK SPLIT, 3/8 MED.	STL CAD PL	
15	2	DOWEL 3/8 DIA x 1½	STL	

NEXT ASSY: 2150.250E002 (WGN 102 901)

REF. FILE 1168

FIND NO.	PART NO.	DESCRIPTION	QTY	MATERIAL	CODE IDENT

LIST OF MATERIAL (LM)

LIMITS ON MACHINED DIMENSIONS EXCEPT AS NOTED
ANGULAR = ± 1° 0'
LINEAR:
.X = ± .1 .XXX = ± .010
.XX = ± .03 FRACTIONAL = ± 1/32
BREAK ALL SHARP EDGES

MATERIAL: SEE MAT'L LIST

150' STELLAR TELESCOPE MOUNTING

DRAWN A. GREEN
CHECK 7-18-69
ENGR

WGN 103 015

APPROVED

Western GEAR CORPORATION — HEAVY MACHINERY DIVISION EVERETT, WASHINGTON

FRAME, COUNTERWEIGHT HORSESHOE ASSY

SIZE	CODE IDENT NO.		REV
E	16603	2150.250E015	C

SCALE 1/2 WT 2420 LB SHEET 1 OF 1

WESTERN GEAR CORPORATION
CONSTRUCTION PROJECTS DEPARTMENT
APPROVED FOR PROCUREMENT
DATE