REVISIONS				
ZONE	LTR	DESCRIPTION	DATE	APPROVED

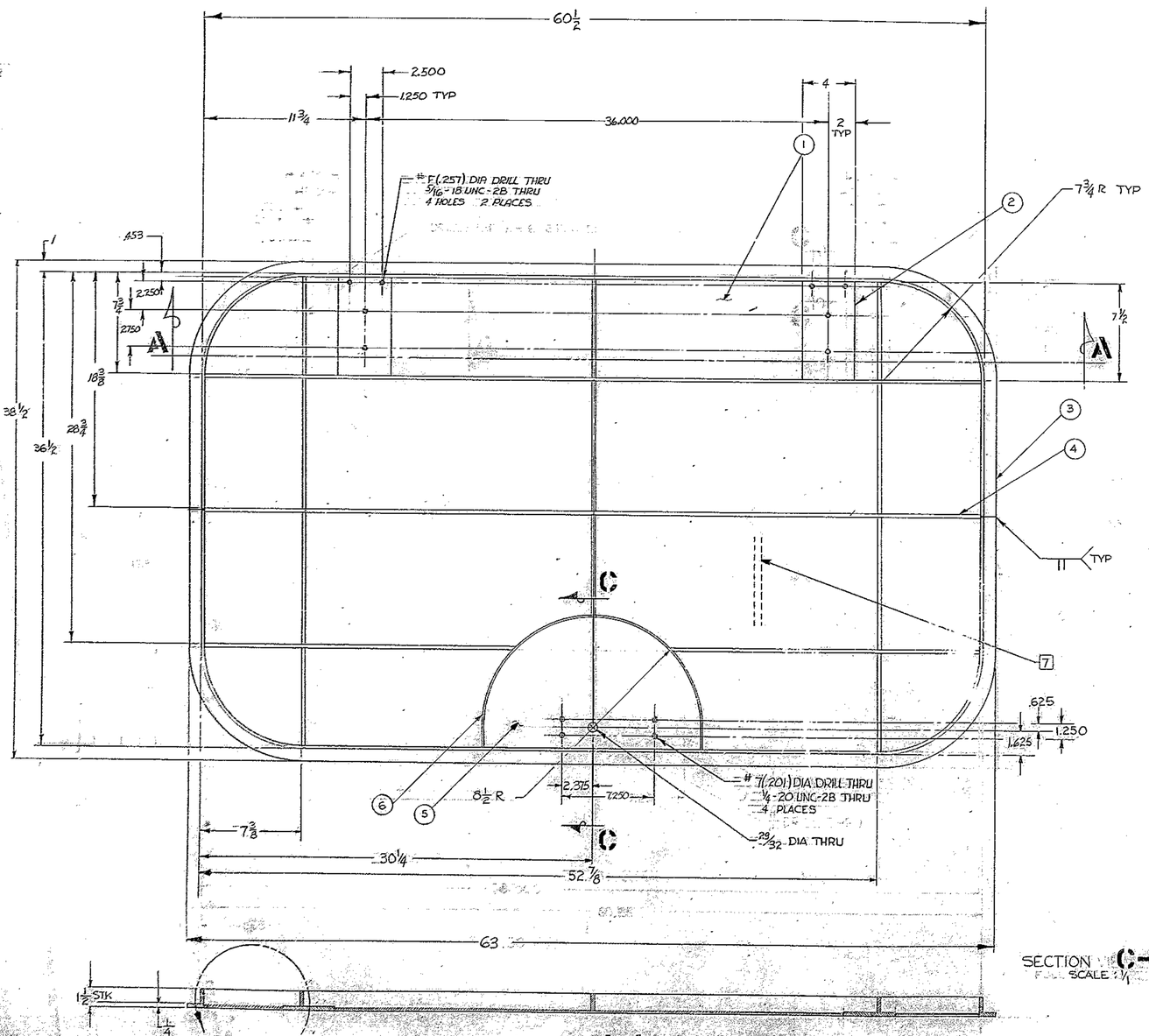

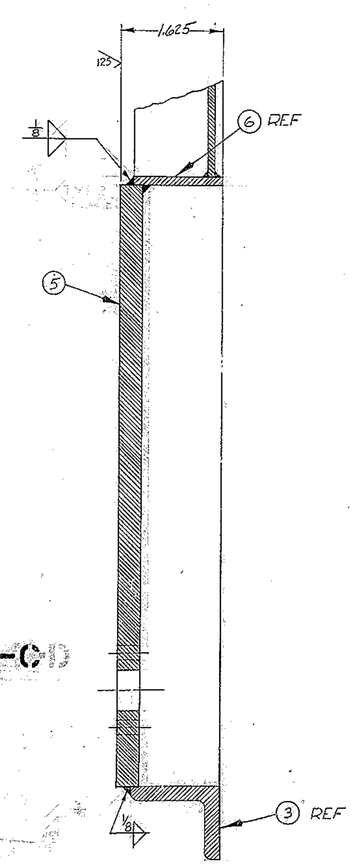

SECTION C-C
SCALE 1/1

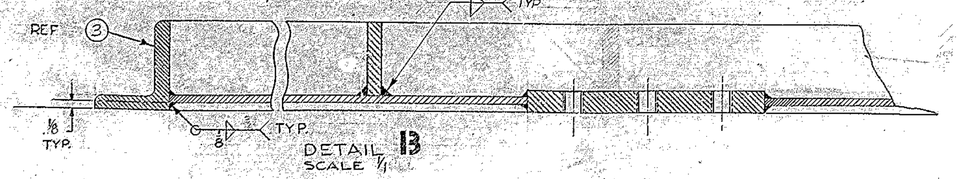

SECTION A-A
SCALE 1/4

DETAIL B
SCALE 1/1

MATERIAL LIST				
P.C.NO.	QTY	DESCRIPTION	MATERIAL AND SPECIFICATION	ROUGH WEIGHT
1	1	PL 36 X 1/8 X 60	STL ASTM A-36	77
2	2	PL 4 X 3/8 X 7 1/2	STL ASTM-A-36	3
3	2	ANGLE 1 1/4 X 1 1/4 X 1/4 X 91.4	STL M1020 H.R.	15
4	24 FT	BAR 1 1/4 X 1/4	STL ASTM A-36	25
5	1	PL 9 1/8 X 1/2 X 17	STL ASTM A-36	24
6	1	PL 1 1/2 X 1/8 X 30	STL ASTM A-36	2

NOTES:
1. FABRICATION TOLERANCES, EXCEPT AS NOTED
   UP TO 10 INCHES ± 1/16
   10 TO 50 INCHES ± 1/8
   50 INCHES & OVER ± 1/4
2. ALL DIMENSIONS ARE IN INCHES
3. WELD PER W.G.C SPECIFICATIONS 752, APPENDIX T1
4. STRESS RELIEVE AFTER WELDING & BEFORE MACHINING PER WGC SPECIFICATION 510
5. APPLY ONE COAT OF PRIME PAINT ALL OVER PER WGC SPECIFICATION 51; IMMEDIATELY AFTER STRESS RELIEVING AND CLEANING
6. ALL SURFACES MARKED ✓ TO BE 125/ ✓ EXCEPT AS NOTED.
7. STAMP PART NO. 2150-250E 009

AUDA INC. JAN 12 1971 SEATTLE, WASH. 98121

OBSOLETE

NEXT ASSY 2150, 250E 002 (W.G.N 102901)

FIND NO.	PART NO.	DESCRIPTION	QTY	MATERIAL	CODE IDENT

LIST OF MATERIAL (LM)

LIMITS ON MACHINED DIMENSIONS EXCEPT AS NOTED
ANGULAR = ± 1° 0'
LINEAR:
.X = ± .1 .XXX = ± .010
.XX = ± .03 FRACTIONAL = ± 1/32
BREAK ALL SHARP EDGES
MATERIAL
SEE MATL LIST

150 INCH STELLAR TELESCOPE MOUNTING

Western GEAR CORPORATION
HEAVY MACHINERY DIVISION
EVERETT, WASHINGTON

DRAWN L. JOHNSON
CHECK 21 Mar 68
ENGR

DOOR
HORSESHOE ASSEMBLY

W.G.N 103078
APPROVED

SIZE	CODE IDENT NO.		REV
E	16603	2150.250E 009	

SCALE NOTED | WT 164 | LB | SHEET 1 OF 1