REVISIONS				
ZONE	LTR	DESCRIPTION	DATE	APPROVED
	A	REL. FOR MANUFACTURE PER AURA	3/12/69	PG
	B	⊙B.006TIR WAS ⊙B.003TIR & ⊙B.002 TIR	6/6/69	PG

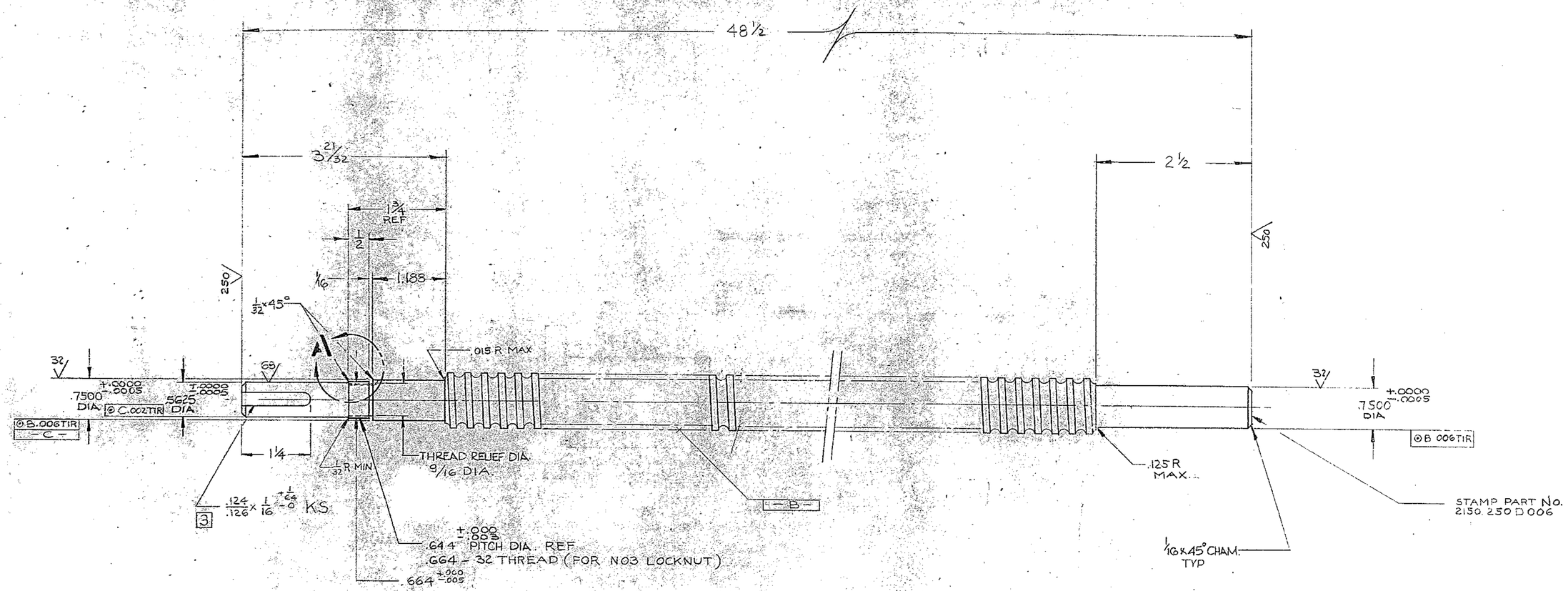

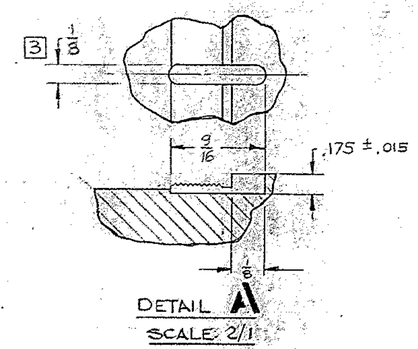

NOTES:

1. ALL DIMENSIONS ARE IN INCHES
2. FINISH 125/ EXCEPT AS NOTED
3. RADIAL ORIENTATION OF KS's NOT IMPORTANT-- - KS MAY BE IN LINE

NEXT ASS'Y: 2150.250E002 (W.G.N 102 901)

REF. FILE 1168

FIND NO.	PART NO.	DESCRIPTION	QTY	MATERIAL	CODE IDENT

LIST OF MATERIAL (LM)

WESTERN GEAR CORPORATION
CONSTRUCTION PROJECTS DEPARTMENT
APPROVED FOR PROCUREMENT
DATE 3/18/69

LIMITS ON MACHINED DIMENSIONS EXCEPT AS NOTED
ANGULAR = ± 1° 0'
LINEAR:
.X = ± .1 .XXX = ± .010
.XX = ± .03 FRACTIONAL = ± 1/32
BREAK ALL SHARP EDGES
MATERIAL
MAKE OR PROCURE FROM S/GINAW NO 1000-0250-C2-SRT L.H.

150 IN STELLAR TELESCOPE MOUNTING

DRAWN	L.GOLD	4-2-68
CHECK		7-9-68
ENGR		

W.GE 107 711
APPROVED ORIGINAL

Western GEAR CORPORATION
HEAVY MACHINERY DIVISION EVERETT, WASHINGTON

SCREW, L.H., HORIZ. HORSESHOE ASS'Y

SIZE	CODE IDENT NO.		REV
D	16603	2150.250D006	B

SCALE 1/1 WT ≈ 12 LB SHEET 1 OF 1