REVISIONS				
ZONE	LTR	DESCRIPTION	DATE	APPROVED
	A	REL. FOR MANUFACTURE		JW
	B	ADDED C'BORE TO 3/8 DIA HOLES	4/6/73	LCS

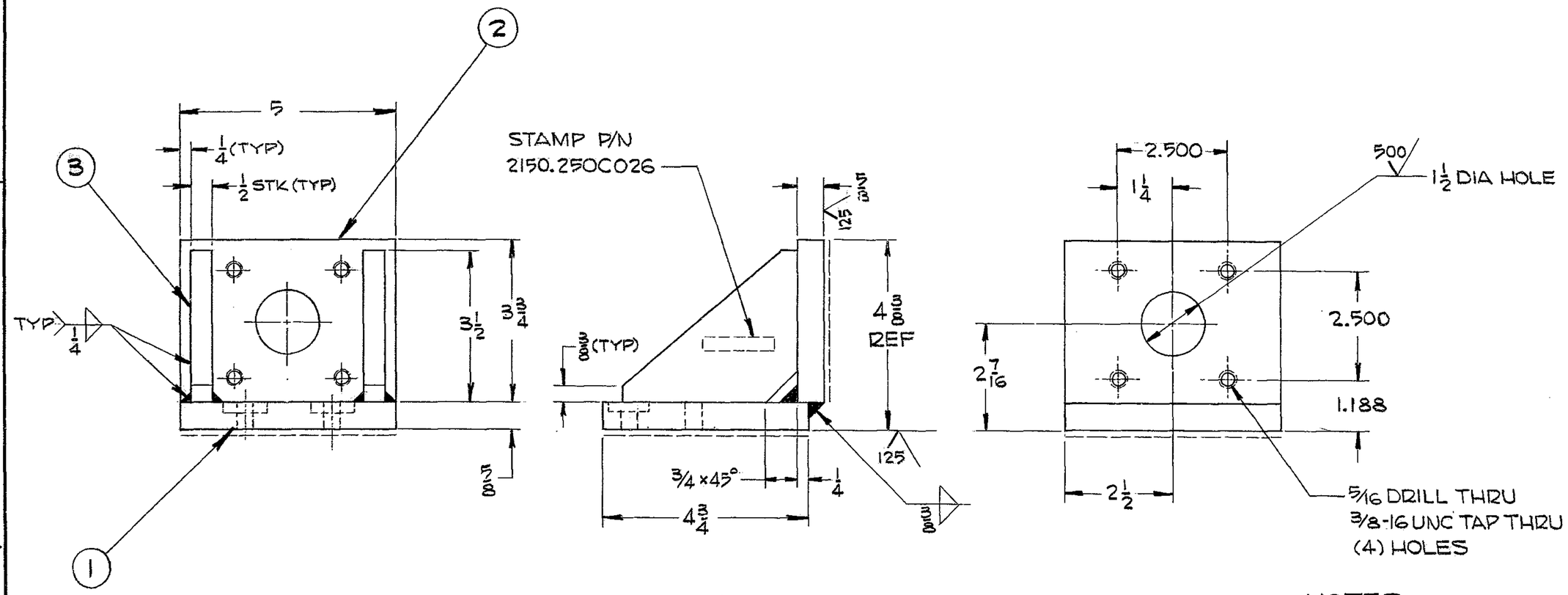

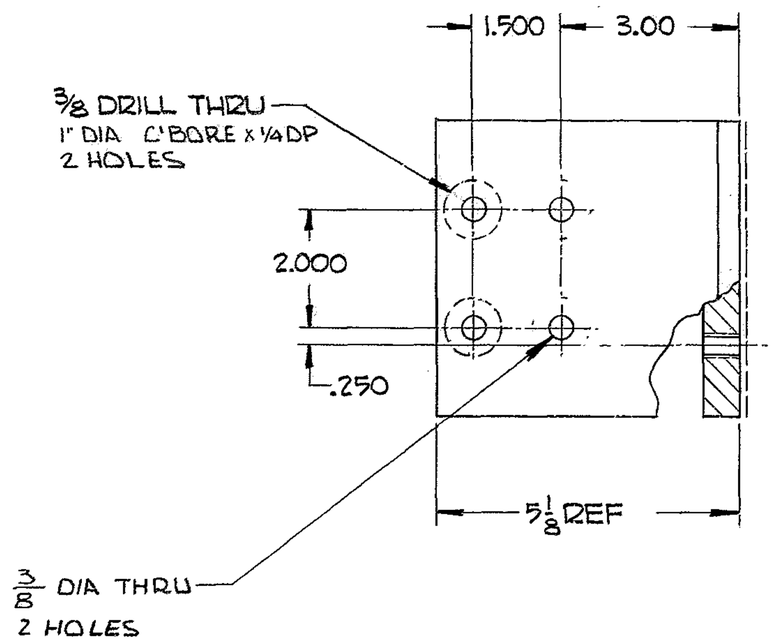

NOTES -

1. ALL DIMS. ARE IN INCHES.
2. WELD PER WGC SPEC 752 APP TI
3. THERMAL STRESS RELIEVE PER WGC SPEC. 510 BEFORE MACHINING.
4. PRIME PAINT ALL OVER PER WGC SPEC 511 IMMEDIATELY AFTER STRESS RELIEVING AND CLEANING.

REF. FILE 1168

NEXT ASSY: 2150.250E002 (WG N 102901)

FIND NO.	PART NO.	DESCRIPTION	QTY	MATERIAL	CODE IDENT
3		PL 4 x 1/2 x 3 1/2	2	STL. ASTM A-36 OR EQ.	
2		PL 5 x 3/4 x 3 3/4	1	STL. ASTM A-36 OR EQ.	
1		PL 5 x 3/4 x 4 3/4	1	STL. ASTM A-36 OR EQ.	

LIST OF MATERIAL (LM)

LIMITS ON MACHINED DIMENSIONS EXCEPT AS NOTED
ANGLAR = ± 1° 0'
LINEAR:
.X = ± .1 .XXX = ± .010
.XX = ± .03 FRACTIONAL = ± 1/32
BREAK ALL SHARP EDGES
MATERIAL
SEE L/M ABOVE

150 IN STELLAR TELESCOPE MOUNTING

DRAWN White 12-8-70
CHECK
ENGR Sykes

WG D107683
APPROVED

Western GEAR CORPORATION
HEAVY MACHINERY DIVISION
EVERETT, WASHINGTON

BRACKET, COUNTERWEIGHT DRIVE — HORSESHOE ASSEMBLY

SIZE	CODE IDENT NO.		REV
C	16603	2150.250C026	B

SCALE 1/2 WT LB SHEET 1 OF 1

P1336