REVISIONS				
ZONE	LTR	DESCRIPTION	DATE	APPROVED
M/L	A	PC# 2-15 1/4 WAS 15 1/4 | PC# 3-5 1/2 WAS	8/17/62	
M/L	A	7 1/8 | PC# 4 QTY WAS 2 4 5/16 WAS 4 3/4		
M/L	A	PC# 8 ADDED		
4F	A	6 1/2 WAS 7 1/8 3.000 +.000 -.005 WAS 3		
	A	VARIOUS WELDING SYMBOLS CHANGED		
6A	A	12.500 +.000 -.010 ADDED.		
7C	A	27/64 WAS 1/2 TAP 1/2-13UNC-2B ADDED		
5E/5B	A	4 1/16 ADDED 4 9/16 WAS 4 3/4 1 3/16 WAS 1 1/2		
7C	A	15 3/8 REF ADDED. 5.375 +.000 -.010 WAS 5 3/4		
5A	A	1.375/1.376 WAS 1.378/1.380.		
6F	A	+.002 -.000 ADDED TO 5.000 DIM'N		
6F	A	6 1/4 DELETED 2 1/8 ADDED.		
6A	A	1 DIM'N WAS 3/4.		
F5 G7 A2	B	P/N 8 WAS 1/4 THK. FIN. SLOTTED HOLES WERE (4) 9/16 DIA HOLES-1/2 WAS .250-1 1/4 WAS 1.000 CORRECTED DWG. NO. - WAS SHOWN WGE 102592	5/14/71	JW
	C	ADDED 8 3/8 & 7/8 KPNO ADDED KPNO DIMS TO PIN 8	4/21/72	LCS

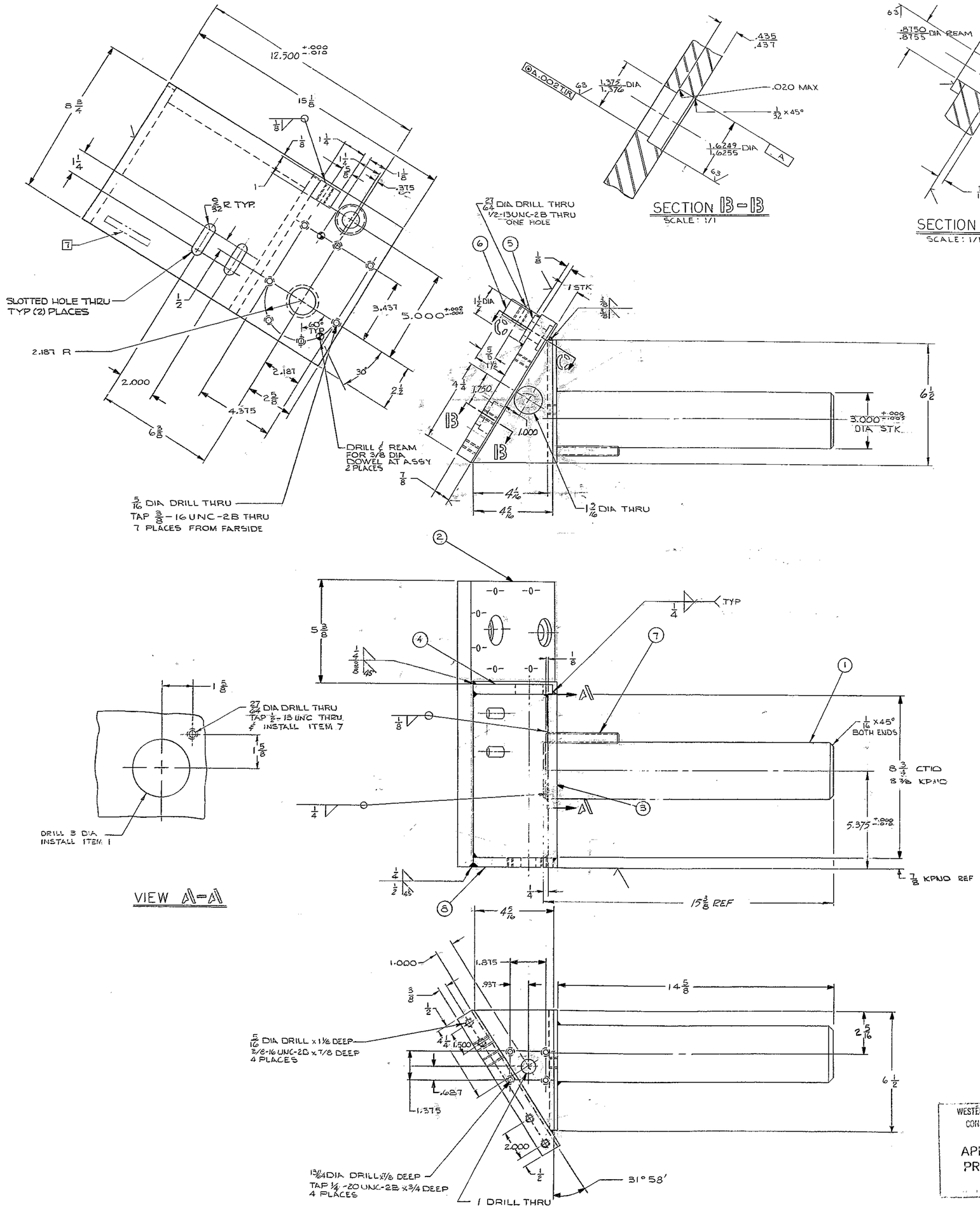

MATERIAL LIST				
PC. NO	QTY	DESCRIPTION	MATL & SPEC	ROUGH WT.
1	1	BAR 3 DIA x 15 3/8	STL, CR-1018 OR EQUIV	31
2	1	PL 1 x 8 3/4 x 15 1/4	STL, ASTM A-36	38
3	1	PL 1/2 x 6 1/2 x 8 3/4	STL, ASTM A-36	8
4		PL 1/2 x 4 9/16 x 6 1/2	STL, ASTM A-36	2 1/2
5	1	BAR 1 1/2 DIA x 5/16	STL, C1018 OR EQUIV	1/2
6	1	PL 1 x 1 1/4 x 1 1/2	STL ASTM A 36	1/2
7	1	STUD 1/2-13UNC x 3 1/6	STL CAD PLATED	
8	1	CTIO 8 3/8 x 4 9/16 x 6 1/2 KPNO 1 x 4 9/16 x 6 1/2	STL ASTM A-36	3

NOTES:

1. ALL DIMENSIONS IN INCHES.
2. FABRICATION TOLERANCES, EXCEPT AS NOTED.
   UP TO 10 INCHES ±1/16
   10 TO 50 INCHES ±1/8
   50 INCHES & OVER ±1/4
3. WELD PER W.G.C. SPECIFICATION 752, APPENDIX T1.
4. STRESS RELIEVE AFTER WELDING & BEFORE MACHINING PER W.G.C. SPECIFICATION NO. 510.
5. APPLY ONE COAT OF PRIME PAINT ALL OVER PER W.G.C. SPECIFICATION NO. 511 IMMEDIATELY AFTER STRESS RELIEVING AND CLEANING.
6. ALL SURFACES MARKED √ TO BE 125√ EXCEPT AS NOTED
7. STAMP PART NO. 2150.240E014 APPROX WHERE SHOWN.
8. ALL WELDS TO BE 1/4 FILLET, CONTINUOUS EXCEPT WHERE NOTED.

NEXT ASSEMBLY 2150.240E002 (W.G.N. 102993)

WESTERN GEAR CORPORATION
CONSTRUCTION PROJECTS DEPARTMENT
APPROVED FOR PROCUREMENT
G.R. DATE SEP 1 1968

FIND NO.	PART NO.	DESCRIPTION	QTY	MATERIAL	CODE IDENT

LIST OF MATERIAL (LM)

LIMITS ON MACHINED DIMENSIONS EXCEPT AS NOTED
ANGULAR = ± 1° 0
LINEAR:
X = ± .1 XXX = ± .010
XX = ± .03 FRACTIONAL = ± 1/32
BREAK ALL SHARP EDGES
MATERIAL
SEE MAT'L LIST

150 TON STELLAR TELESCOPE MOUNTING

DRAWN R. L. FARMER 3-27-68
CHECK R. Hines 5-29-68
ENGR

W.G.N. 102992
APPROVED

Western GEAR CORPORATION
HEAVY MACHINERY DIVISION
EVERETT, WASHINGTON

BRACKET, ADJUSTING R/H
CASSEGRAIN RAMP ASSEMBLY

SIZE E | CODE IDENT NO. 16603 | 2150.240E014 | REV C
SCALE 1/2 | WT 81 LB | SHEET 1 OF 1