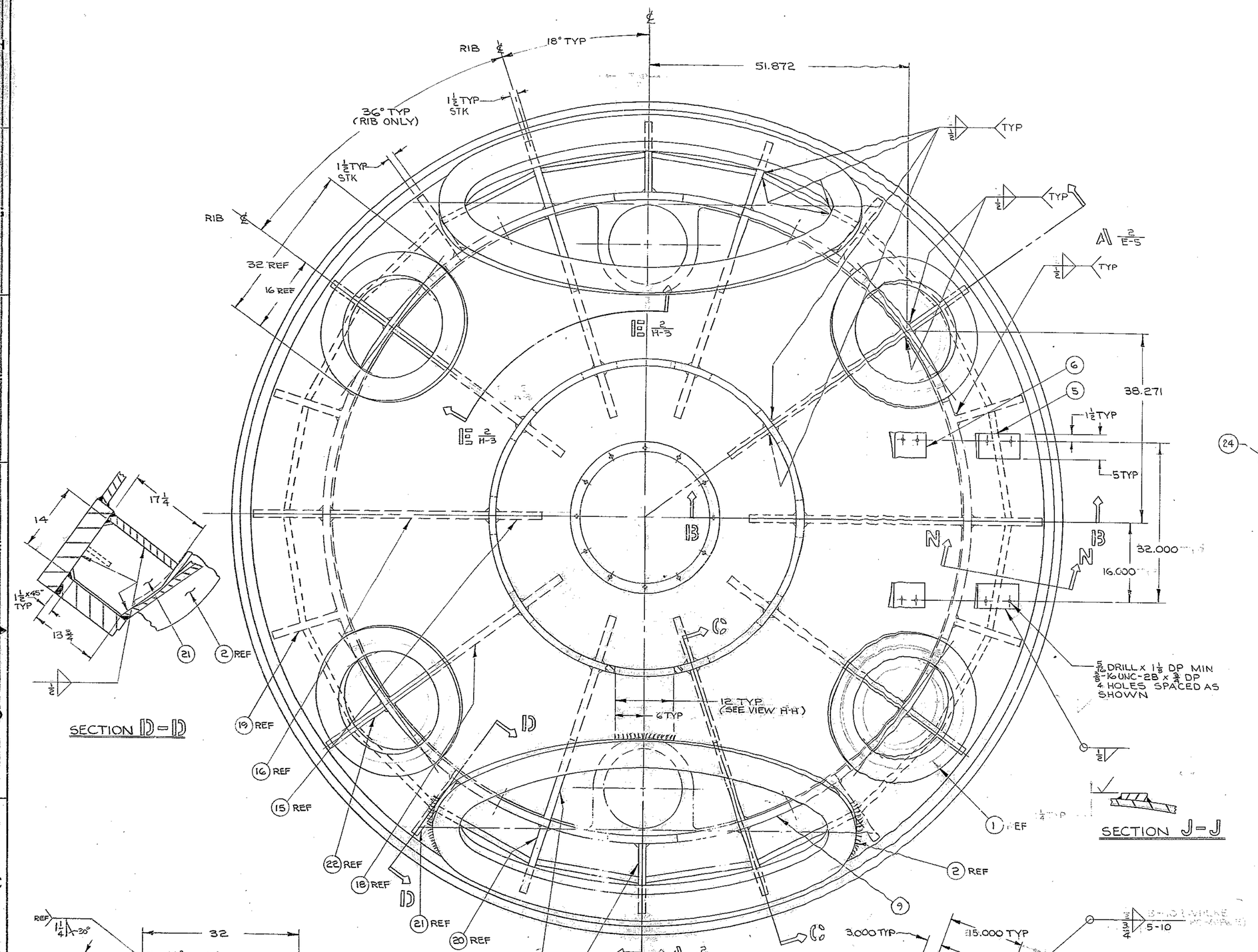

REVISIONS				
ZONE	LTR	DESCRIPTION	DATE	APPROVED
	A	REVISED PER AURA APP. CONST PRINT DATED 3-15-68	3/19/68	
8H	B	B.C.D WAS 27.000 IS 28.250	4/10/68	
4B	B	ADDED ARROW TO 5.000 DIM	4/10/68	
2D	C	NOTE #2 WAS W.G.C SPEC 752	4/24/68	
2C	C	ADD NOTE #9	"	
B2	D	ADDED: NOTE 10	11/17/68	
	E	ADDED PART #24 & RELATED DIM.	12-10-68	

MATERIAL LIST				
PC. NO.	QTY.	DESCRIPTION	MAT'L & SPEC	ROUGH WT. EACH
1	4	RING 31 O.D. x 4 x 21½ I.D.	STL, ASTM A-36	454
2	2	PL 85.5 x 37.5 (OUT) 74.5 x 26.5 (INSIDE) x 8		2193
3	1	CYL 169 O.D. x 4½ WALL x 15¾		10,048
4	1	RING 169 O.D. x 5 x 127 I.D.		14,209
5	2	PL 5 x 1⅜ x 9		19
6	2	PL 5 x 1¾ x 7		17
7	1	CYL 64 O.D. x 1½ WALL x 80⅝		6718
8	1	CYL 57 O.D. x 2 WALL x 10½		1004
9	1	CYL 131 O.D. x 1½ WALL x 19⅝		3372
10	1	PL 61 O.D. x 1½ x 25¾ I.D.		1023
11	1	CONE 160 O.D. x 1½ x 64 I.D.		7627
12	1	RING 127 O.D. x 1¾ x 64 I.D.		4686
13	1	RING 63 O.D. x 1¾ x 32 I.D.		493
14	1	RING 56 O.D. x 3¼ x 37 I.D.		1278
15	10	PL 9½ x 1½ x 91½		369
16	2	PL 32 x 1½ x 33		449
17	4	PL 32 x 1½ x 33		449
18	4	PL 32 x 1½ x 33		449
19	6	PL 14 x 1½ x 19		113
20	4	PL 14 x 1½ x 15⅛		92
21	4	PL 14 x 1½ x 17¼		103
22	4	PL 14 x 1½ x 17¼		103
23	2	PL 12½ x 1½ x 14		74
24	20	PL 1 x 6 x 21⅛		36

ROUGH TOTAL 67,230

NOTES:

1. FABRICATION TOLERANCES, EXCEPT AS NOTED
   UP TO 10 INCHES ± 1/16
   10 TO 50 INCHES ± 1/8
   50 INCHES & OVER ± 1/4
2. WELD PER A.W.S. SPECIFICATION NO. D1.0-66
3. STRESS RELIEVE AFTER WELDING & BEFORE MACHINING PER W.G.C. SPECIFICATION 510.
4. APPLY ONE COAT OF PRIME PAINT ALL OVER PER W.G.C. SPECIFICATION 511 IMMEDIATELY AFTER STRESS RELIEVING.
5. ALL SURFACES MARKED √ TO BE 125√ EXCEPT AS NOTED.
6. THESE HOLES TO BE LOCATED USING A TEMPLATE WHICH IS TO BE USED FOR LOCATING CORRESPONDING HOLES ON MATING PART. OPTION: LOCATE HOLES FROM MATING PART
7. TO BE MEASURED ONLY AT LOCATION SHOWN AND AT ANGLE INDICATED.
8. ALL DIMENSIONS ARE IN INCHES.
9. ALL DIMENSIONS APPLY AT 70° F ± 5° F.
10. MAGNAFLUX INSPECT THESE WELDS AFTER STRESS RELIEVING & CLEANING

NEXT ASSY 2150.210E002 (W.G. N 102,833)

REF FILE 1165

FIND NO.	PART NO.	DESCRIPTION	QTY	MATERIAL	CODE IDENT
		LIST OF MATERIAL (LM)			

LIMITS ON MACHINED DIMENSIONS EXCEPT AS NOTED
ANGULAR = ± 1° 0'
LINEAR: X = ± .1 .XXX = ± .010 .XX = ± .03 FRACTIONAL = ± 1/32
BREAK ALL SHARP EDGES
MATERIAL (Raw) SEE MAT'L LIST

150 IN STELLAR TELESCOPE MOUNTING

Western GEAR CORPORATION — HEAVY MACHINERY DIVISION, EVERETT, WASHINGTON

DRAWN SESSIONS JAN 68
CHECK R. Hodges 2-23-68
ENGR

JOURNAL, SOUTH POLAR AXLE ASSY

W.G. N 102,834

APPROVED

SIZE	CODE IDENT NO.		REV
E	16603	2150.210E003	E

SCALE 1/8 WT 57,496 LB SHEET 1 OF 2

WESTERN GEAR CORPORATION
CONSTRUCTION PROJECTS DEPARTMENT
APPROVED FOR PROCUREMENT
DATE 3/25/68