THIS DOCUMENT CONTAINS INFORMATION PROPRIETARY TO WESTERN GEAR CORPORATION. ALL DESIGN, MANUFACTURING, REPRODUCTION, USE, PATENT AND SALES RIGHTS REGARDING THE SAME ARE HEREBY EXPRESSLY RESERVED BY WESTERN GEAR CORPORATION. THIS DOCUMENT IS SUMBITTED FOR REFERENCE PURPOSES ONLY AND SHALL NOT BE DISCLOSED TO ANY UNAUTHORIZED PERSON OR INCORPORATED INTO ANY OTHER PROJECT.

LIST OF MATERIAL						
ITEM No.	DESCRIPTION	QTY	MAT'L	SPEC.	UNIT WT	REMARKS
1	PL $12\frac{3}{4}$ O.D. × $9\frac{1}{2}$ I.D. × 1"	1	STL	ASTM-A-36	16	SMOOTH BURN O.D. & I.D.
2	TUBE $9\frac{1}{2}$ O.D. × $\frac{1}{4}$ WALL × $59\frac{5}{8}$	1	"	AISI M 1015	150	
3	PL 20" O.D. × $9\frac{1}{2}$ I.D. × $\frac{3}{8}$	1	"	ASTM A-36	26	
4	PL $11\frac{1}{2}$ O.D. × $8\frac{1}{8}$ I.D. × 1"	1	"	ASTM A-36	15	SMOOTH BURN O.D. & I.D.

REVISIONS				
ZONE	LTR	DESCRIPTION	DATE	APPROVED
	A	REL. PER ADRA APPD PRINT	18 OCT 69	
A-5 C-2	B	± 1/8 WAS ± 1/16 5/16 WAS 3/8	3/28-73	LDS

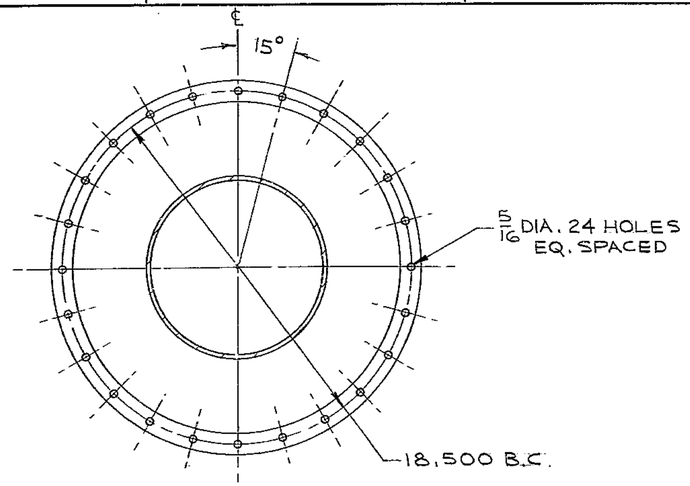

SECT. A-A
SCALE $\frac{1}{4}$

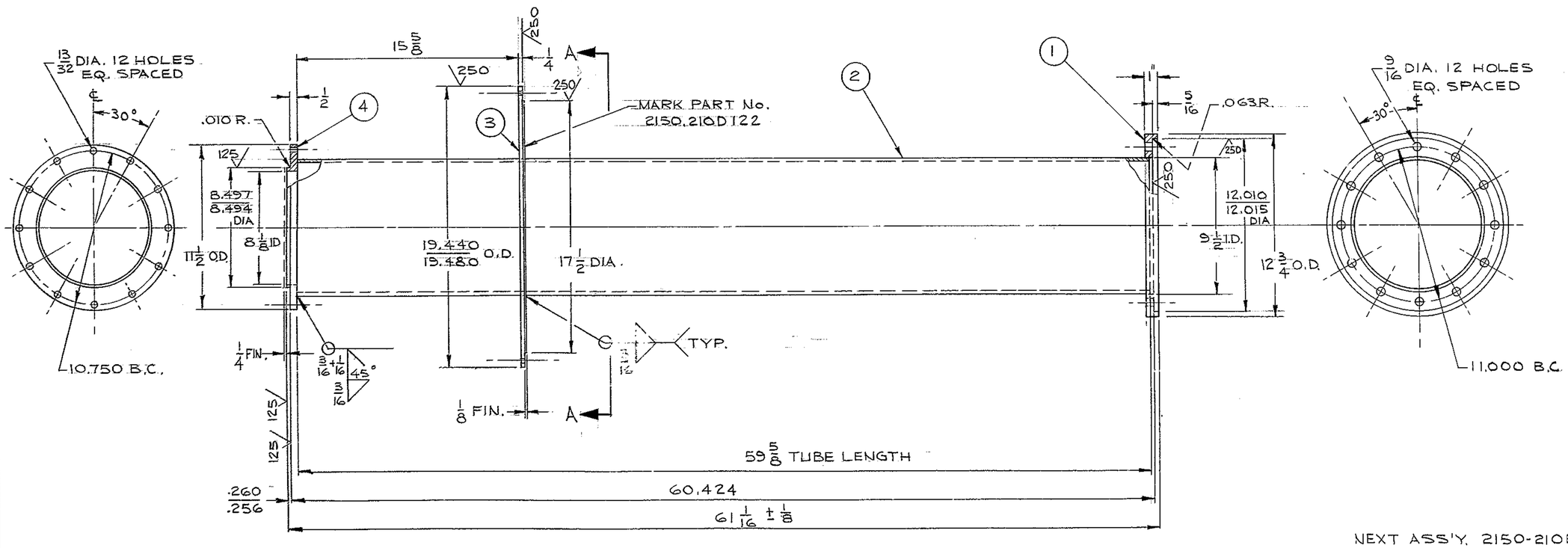

WESTERN GEAR CORPORATION
CONTROL OF THE PLANTS
DRAWING
APPROVED FOR PROCUREMENT
GR DATE 10/23/69

NEXT ASS'Y. 2150-210E102 (WCN-102,959)

1165

NOTES:
1. ALL DIMENSIONS ARE IN INCHES
2. FABRICATION TOLERANCES EXCEPT AS INDICATED
   a) UP TO 10 INCHES ± 1/16 b) 10" TO 50" ± 1/8
   c) 50" & OVER ± 1/4
3. STRESS RELIEVE AFTER WELDING & BEFORE MACHINING PER WGC SPEC. 510
4. WELD PER W.G.C. SPECIFICATION 752 APP T 1
5. APPLY ONE COAT OF PRIMER PAINT TO ALL SURFACES PER WGC SPEC. 511 IMMEDIATELY AFTER STRESS RELIEVING & CLEANING.

FIND NO.	PART NO.	DESCRIPTION	QTY	MATERIAL	CODE IDENT
LIST OF MATERIAL (LM)					

LIMITS ON MACHINED DIMENSIONS EXCEPT AS NOTED
ANGULAR = ± 1° 0'
LINEAR:
.X = ± .1 .XXX = ± .010
.XX = ± .03 FRACTIONAL = ± 1/32
BREAK ALL SHARP EDGES
MATERIAL
SEE LIST OF MATERIAL

150" STELLAR TELESCOPE MTG.

DRAWN	McGHEE	4-8-69
CHECK		
ENGR	Ellingham	4/18/69

WGE-107,849
APPROVED

Western GEAR CORPORATION — HEAVY MACHINERY DIVISION, EVERETT, WASHINGTON

FORWARD OUTER TUBE
P.A. CABLE WRAP UP

SIZE	CODE IDENT NO.		REV
D	16603	2150.210D122	B

SCALE 1/4 WT 200 LB SHEET 1 OF 1