THIS DOCUMENT CONTAINS INFORMATION PROPRIETARY TO WESTERN GEAR CORPORATION. ALL DESIGN, MANUFACTURING, REPRODUCTION, USE, PATENT AND SALES RIGHTS REGARDING THE SAME ARE HEREBY EXPRESSLY RESERVED BY WESTERN GEAR CORPORATION. THIS DOCUMENT IS SUMBITTED FOR REFERENCE PURPOSES ONLY AND SHALL NOT BE DISCLOSED TO ANY UNAUTHORIZED PERSON OR INCORPORATED INTO ANY OTHER PROJECT.

LIST OF MATERIAL

ITEM No.	DESCRIPTION	QTY.	MAT'L	SPEC	UNIT WT	REMARKS
1	PL $10\frac{3}{4}$ O.D. × $7\frac{1}{2}$ ID × $2\frac{1}{2}$	1	ST'L	ASTM A-36	33	
2	TUBE $9\frac{1}{2}$ O.D. × $\frac{1}{4}$ WALL × $9\frac{5}{8}$	1	"	AISI M 1015	18	
3	PL $12\frac{1}{4}$ O.D × $9\frac{1}{2}$ I.D. × $\frac{1}{2}$	1	"	ASTM A 36	7	

REVISIONS

ZONE	LTR	DESCRIPTION	DATE	APPROVED
	A	REVISED PER AURA APPD PRINT	23 Oct '69	
C-6	B	11.993 WAS 11.995	3/28/73	LDS

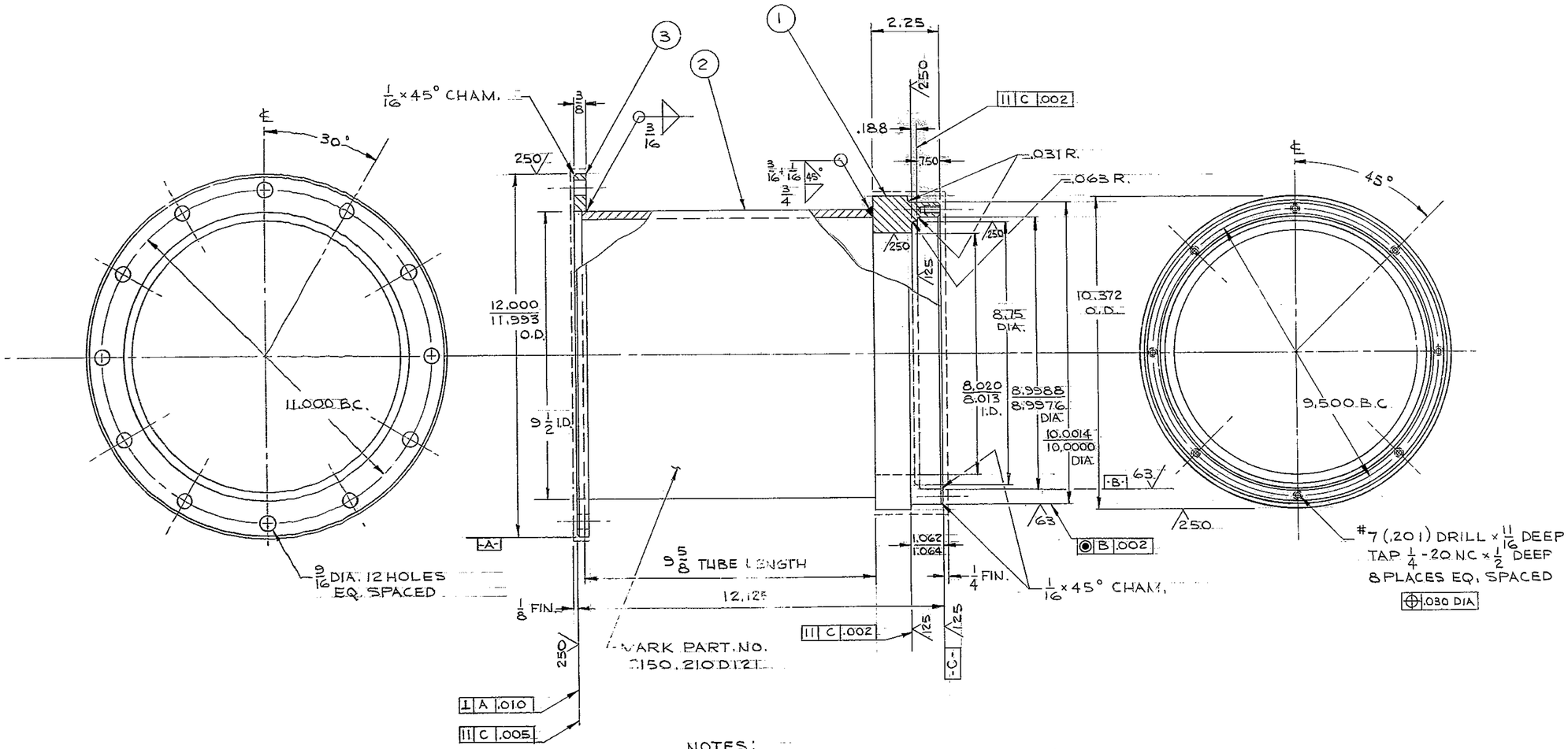

NOTES;
1. STRESS RELIEVE AFTER WELDING & BEFORE MACHINING PER WGC SPEC. 510
2. WELD PER WGC SPECIFICATION 752 APP T 1
3. APPLY ONE COAT OF PRIMER PAINT TO ALL SURFACES PER WGC SPEC. 511 IMMEDIATELY AFTER STRESS RELIEVING & CLEANING.

WESTERN GEAR CORPORATION
CONSTRUCTION PROJECTS
DEPARTMENT
APPROVED FOR
PROCUREMENT
GR DATE 10/23/69

NEXT ASS'Y. 2150.210E102 (WGN-102,959)

1165

FIND NO.	PART NO.	DESCRIPTION	QTY	MATERIAL	CODE IDENT

LIST OF MATERIAL (LM)

LIMITS ON MACHINED DIMENSIONS EXCEPT AS NOTED
ANGULAR = ± 1° 0'
LINEAR:
.X = ± .1 .XXX = ± .010
.XX = ± .03 FRACTIONAL = ± 1/32
BREAK ALL SHARP EDGES
MATERIAL
SEE MAT'L. LIST ABOVE

150IN STELLAR TELESCOPE MTG.

DRAWN McGHEE 4-9-69
CHECK
ENGR 4/18/69

WGE-107,848
APPROVED

Western GEAR CORPORATION
HEAVY MACHINERY DIVISION
EVERETT, WASHINGTON

REAR OUTER TUBE
P.A. CABLE WRAP-UP

SIZE	CODE IDENT NO.		REV
D	16603	2150.210D121	B

SCALE 1/2 WT 55 LB SHEET 1 OF 1