THIS DOCUMENT CONTAINS INFORMATION PROPRIETARY TO WESTERN GEAR CORPORATION. ALL DESIGN, MANUFACTURING, REPRODUCTION, USE, PATENT AND SALES RIGHTS REGARDING THE SAME ARE HEREBY EXPRESSLY RESERVED BY WESTERN GEAR CORPORATION. THIS DOCUMENT IS SUMBITTED FOR REFERENCE PURPOSES ONLY AND SHALL NOT BE DISCLOSED TO ANY UNAUTHORIZED PERSON OR INCORPORATED INTO ANY OTHER PROJECT.

REVISIONS

ZONE	LTR	DESCRIPTION	DATE	APPROVED
	B	REVISED & REDRAWN	2-7-69	
	C	REVISED PER AURA APPD PRINT	15 OCT 69	
B-4	D	.620/.610 WAS .620/.615	3-28-73	LDS

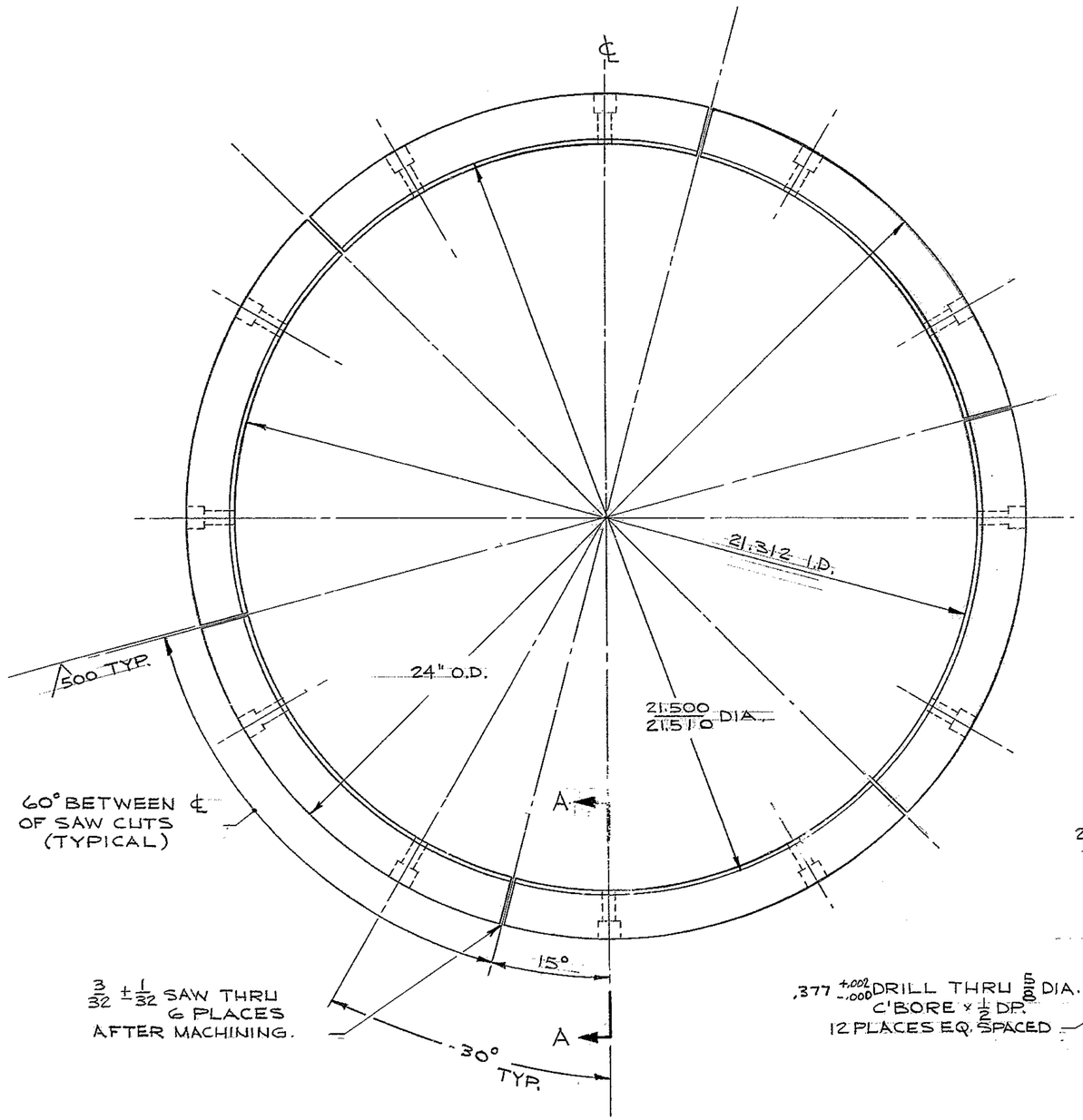

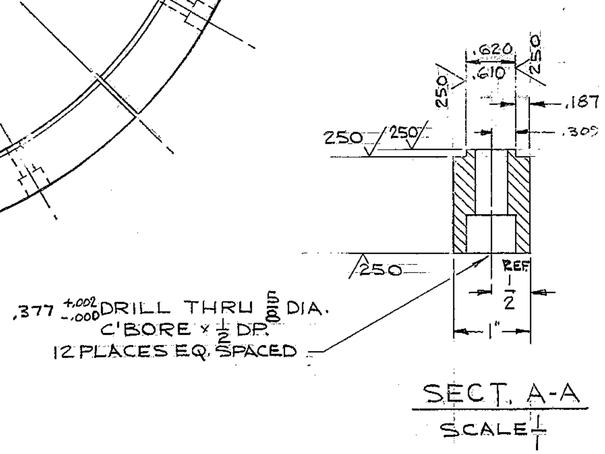

SECT. A-A
SCALE 1/1

NOTES:
1. TAG EACH PART WITH DWG. NO. 2150.210D110 (6 TOTAL)
2. COORDINATE WITH P/N 2150.210C124 WG. D-107,559 & 2150.210D115 WC. E-107,632

WESTERN GEAR CORPORATION
CONSTRUCTION PROJECTS DEPARTMENT
APPROVED FOR PROCUREMENT
GR DATE 10/20/69

NEXT ASS'Y. 2150.210D115 (WGE 107,632)

REF. 1165

FIND NO.	PART NO.	DESCRIPTION	QTY	MATERIAL	CODE IDENT

LIST OF MATERIAL (LM)

LIMITS ON MACHINED DIMENSIONS EXCEPT AS NOTED
ANGULAR = ± 1° 0'
LINEAR:
.X = ± .1 .XXX = ± .010
.XX = ± .03 FRACTIONAL = ± 1/32
BREAK ALL SHARP EDGES
MATERIAL:
SMOOTH BURN ℞.
24" O.D. × 21 I.D.
× 1" TH'K. ST'L.
ASTM A-7 OR EQ.

150IN STELLAR TELESCOPE MTG.

DRAWN McGHEE 4-7-69
CHECK
ENGR 4/18/9

WGE-107,623
APPROVED

Western GEAR CORPORATION
HEAVY MACHINERY DIVISION
EVERETT, WASHINGTON

CABLE HOLDER
P.A. CABLE WRAP-UP

SIZE	CODE IDENT NO.		REV
D	16603	2150.210D110	D

SCALE 1/2 WT 27 LB SHEET 1 OF 1