| REVISIONS | | | | |
|---|---|---|---|---|
| ZONE | LTR | DESCRIPTION | DATE | APPROVED |
| | A | APPROVED PER AURA APP PRINT | 8/14/68 | |

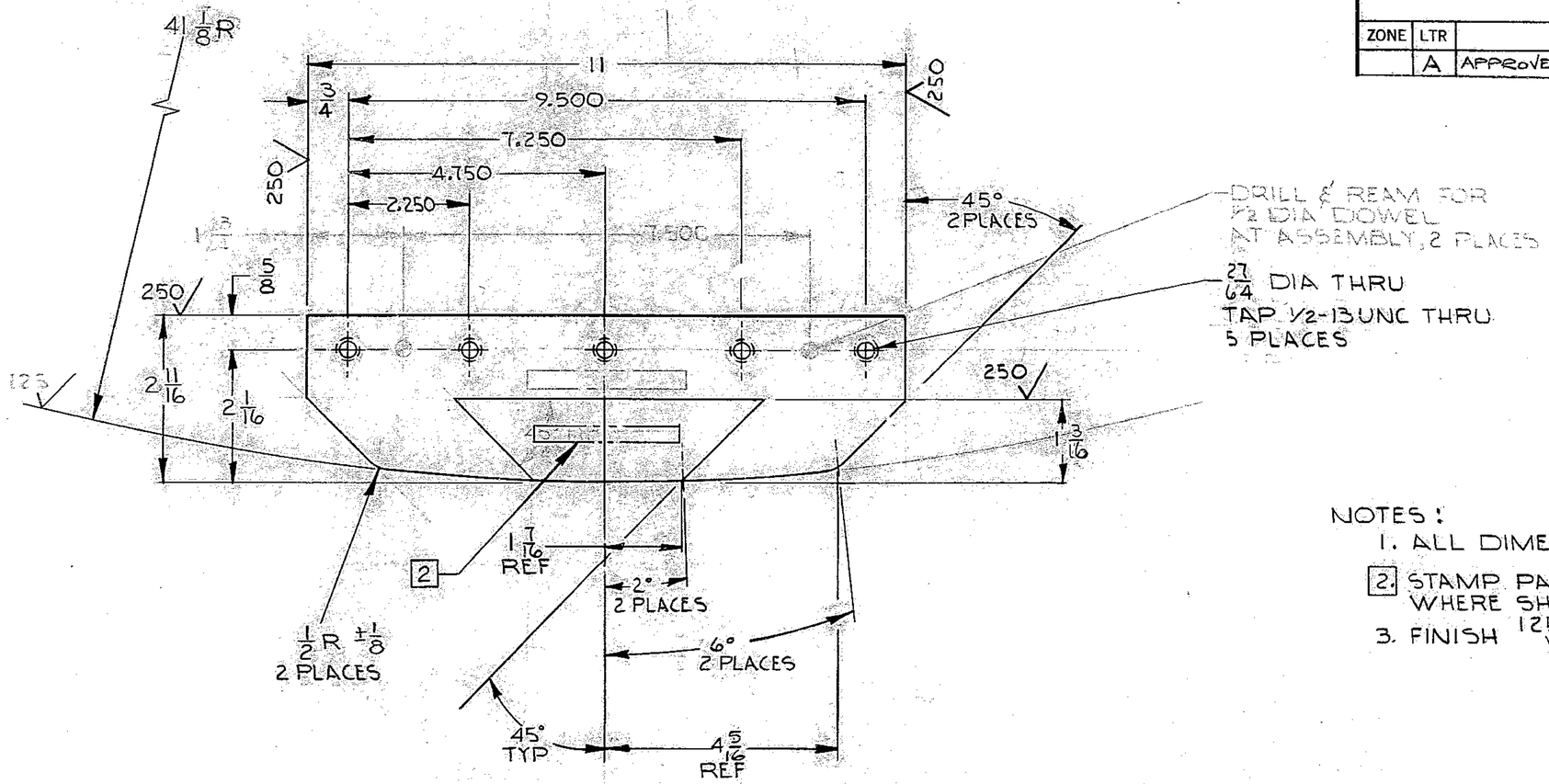


NOTES:
1. ALL DIMENSIONS ARE IN INCHES.
2. STAMP PART NO. "2150.210C014" APPROX WHERE SHOWN, FAR SIDE
3. FINISH 125 ALL OVER EXCEPT AS NOTED.

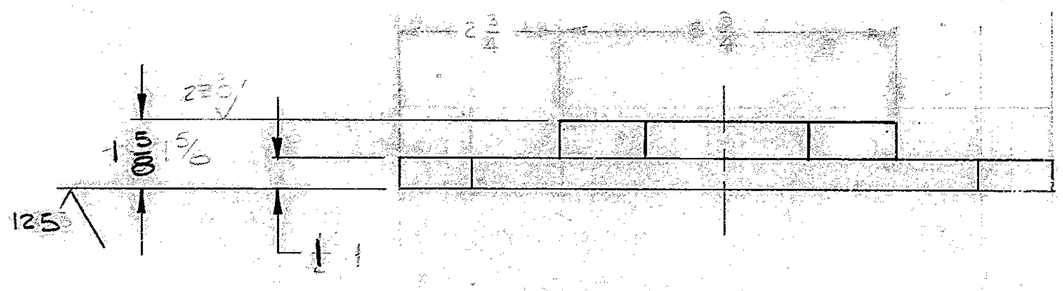


OBSOLETE
SUPERSEDED BY
NOT USED
DRAWING NO. REV. REV. DATE

OBSOLETE
NOT USED

REF.
FILE

NEXT ASSY 2150. 210E 002 (W.G. N102833)

| FIND NO. | PART NO. | DESCRIPTION | QTY | MATERIAL | CODE IDENT |
|---|---|---|---|---|---|

LIST OF MATERIAL (LM)

WESTERN GEAR CORPORATION
CONSTRUCTION PROJECTS
DEPARTMENT
APPROVED FOR
PROCUREMENT
DATE 8-14-68

LIMITS ON MACHINED DIMENSIONS
EXCEPT AS NOTED
ANGULAR = ± 1° 0'
LINEAR:
.X = ± .1 .XXX = ± .010
.XX = ± .03 FRACTIONAL = ± 1/32
BREAK ALL SHARP EDGES
MATERIAL
STL ASTM A7
3 x 1 3/4 x 1 1/4

150 IN. STELLAR
TELESCOPE MTG

DRAWN R.ORR MAR 68
CHECK Gene Russo 10 APR 68
ENGR

W.G.D 107396
APPROVED

Western GEAR CORPORATION
HEAVY MACHINERY DIVISION
EVERETT, WASHINGTON

CAM -
POLAR AXLE ASSEMBLY

| SIZE | CODE IDENT NO. | | REV |
|---|---|---|---|
| C | 16603 | 2150.210C014 | A |

SCALE 1/2 WT 5 LB SHEET 1 OF 1

P1336