| REVISIONS | | | | |
|---|---|---|---|---|
| ZONE | LTR | DESCRIPTION | DATE | APPROVED |
| | A | APPROVED PER AURA APPROVED PRINT | 8-14-68 | |

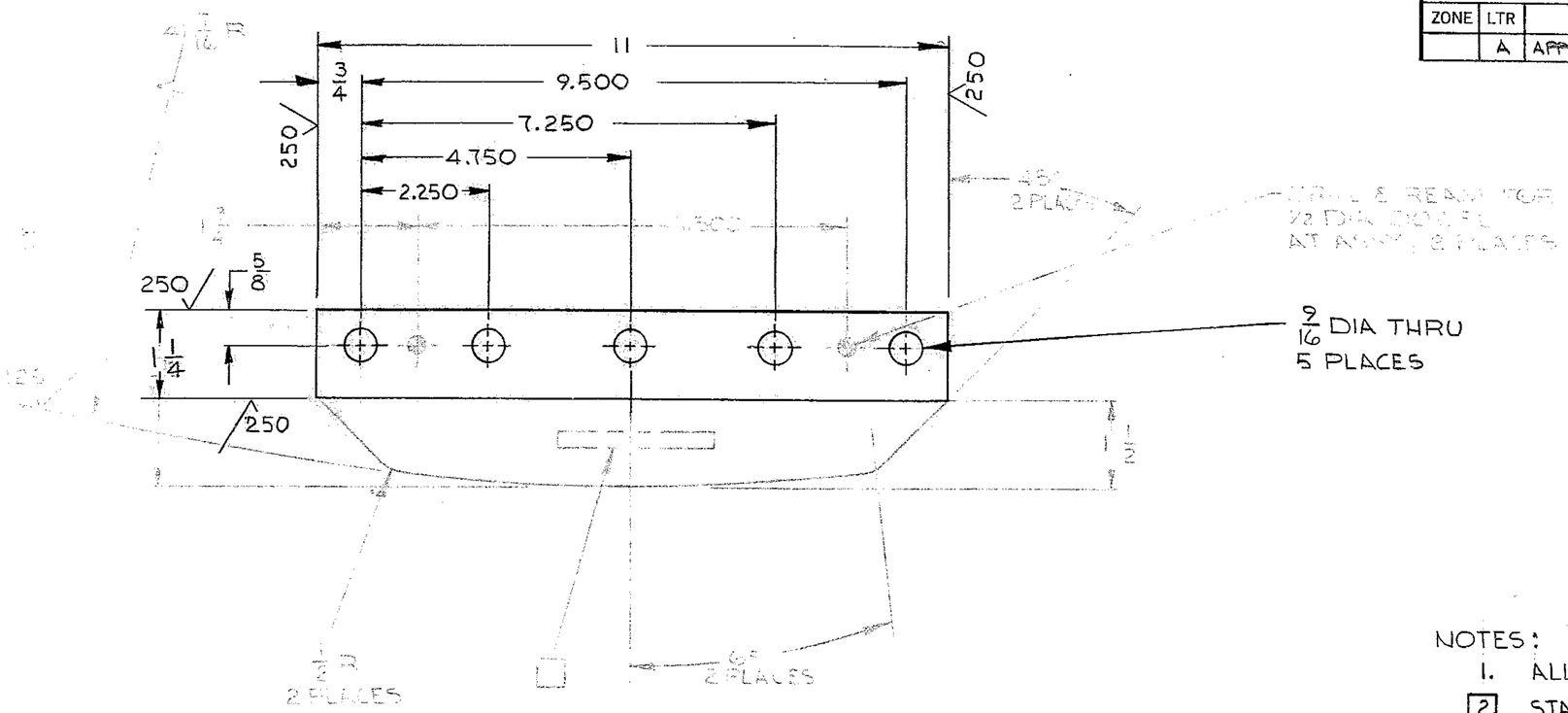


NOTES:

1. ALL DIMENSIONS ARE IN INCHES.
2. STAMP PART NO. 2150.210C013 APPROX WHERE SHOWN.

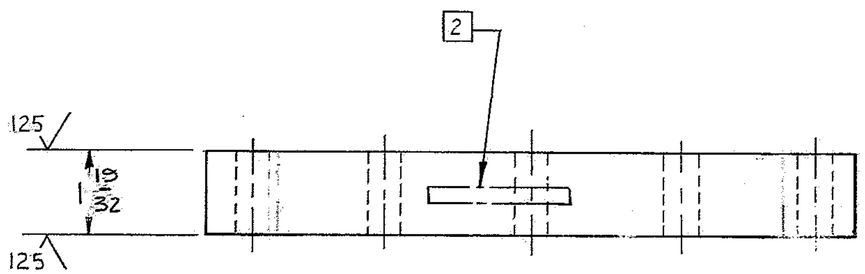


OBSOLETE
NOT USED

REF.
FILE

NEXT ASSY 2150. 210E002 (W.G.N 102833)

| FIND NO. | PART NO. | DESCRIPTION | QTY | MATERIAL | CODE IDENT |
|---|---|---|---|---|---|

LIST OF MATERIAL (LM)

LIMITS ON MACHINED DIMENSIONS
EXCEPT AS NOTED
ANGULAR = ± 1° 0'
LINEAR:
.X = ± .1 .XXX = ± .010
.XX = ± .03 FRACTIONAL = ± 1/32

BREAK ALL SHARP EDGES

MATERIAL
AL x ALLOY ALUM
6061-T6 OR EQUIV.
1¼ x 1⅝ x 11

150 IN. STELLAR
TELESCOPE MTG

| | | |
|---|---|---|
| DRAWN | R. ORR | MAR 68 |
| CHECK | Gene Russo | 11 APR 68 |
| ENGR | | |

W.G.D 107428

APPROVED

WESTERN GEAR CORPORATION
HEAVY MACHINERY DIVISION
EVERETT, WASHINGTON

SPACER -
POLAR AXLE ASSEMBLY

| SIZE | CODE IDENT NO. | | REV |
|---|---|---|---|
| C | 16603 | 2150. 210C013 | A |

SCALE 1/2 WT 4 LB SHEET 1 OF 1

WESTERN GEAR CORPORATION
CONSTRUCTION PROJECTS
DEPARTMENT
APPROVED FOR
PROCUREMENT
DATE 8-14-68

P1336