THIS DOCUMENT CONTAINS INFORMATION PROPRIETARY TO WESTERN GEAR CORPORATION. ALL DESIGN MANUFACTURING, REPRODUCTION, USE, PATENT, AND SALES RIGHTS REGARDING THE SAME ARE HEREBY EXPRESSLY RESERVED BY WESTERN GEAR CORPORATION. THIS DOCUMENT IS SUBMITTED FOR REFERENCE PURPOSES ONLY AND SHALL NOT BE DISCLOSED TO ANY UNAUTHORIZED PERSON OR INCORPORATED INTO ANY OTHER REPORT.

REVISIONS				
ZONE	LTR	DESCRIPTION	DATE	APPROVED
	B	SEE SHT 1		
	C	SEE SHT 1		
	D	SEE SHT 1		
	E	SEE SHTS 1 & 3		
	F	ADDED P/N 10 & 11	5/8/72	G.T.
	G	ADDED VIEW M-M, 2° DIM, P/N 16,15,34,18	3/20/73	LDS

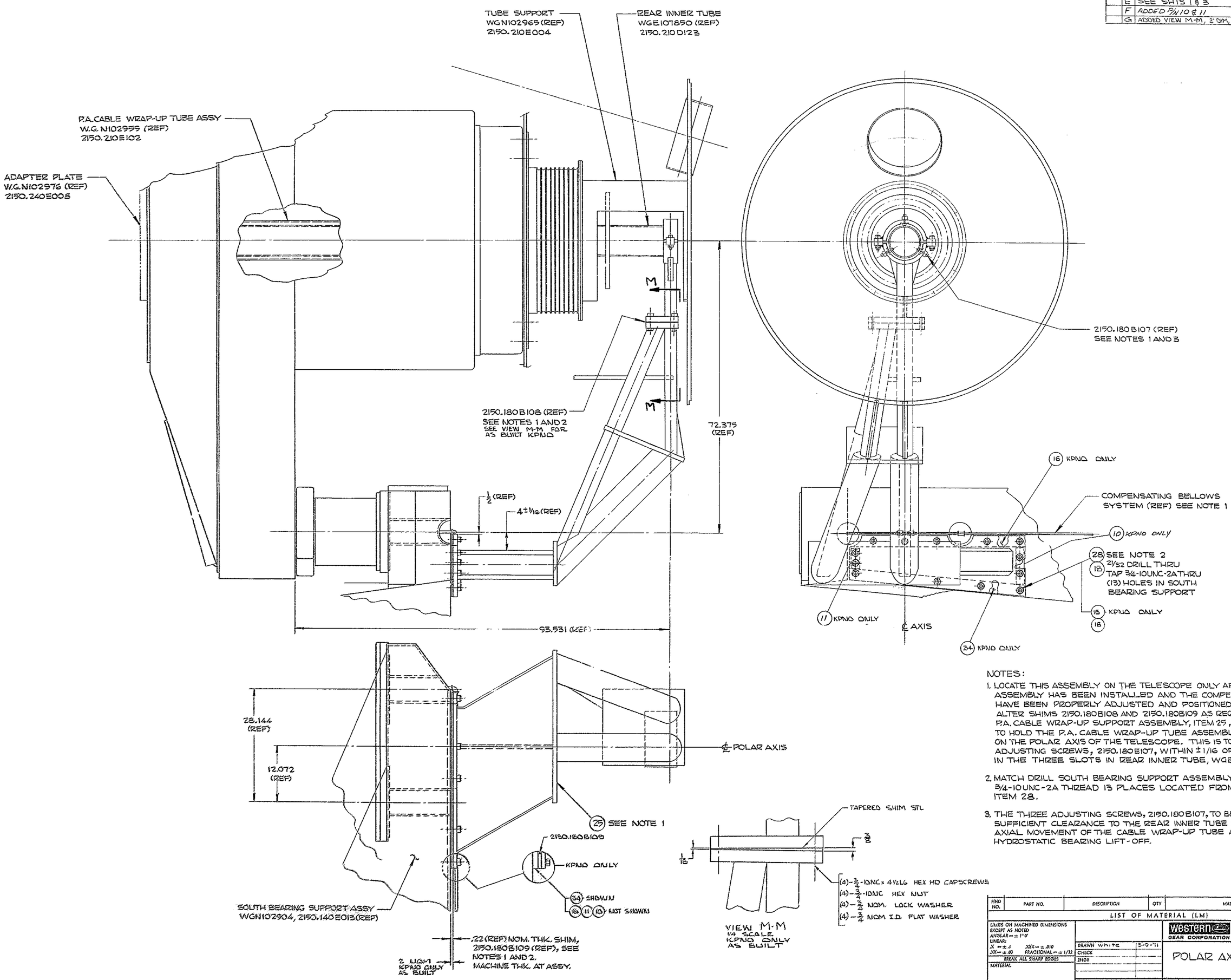

NOTES:

1. LOCATE THIS ASSEMBLY ON THE TELESCOPE ONLY AFTER POLAR AXIS ASSEMBLY HAS BEEN INSTALLED AND THE COMPENSATING BELLOWS HAVE BEEN PROPERLY ADJUSTED AND POSITIONED.
   ALTER SHIMS 2150.180B108 AND 2150.180B109 AS REQUIRED TO LOCATE P.A. CABLE WRAP-UP SUPPORT ASSEMBLY, ITEM 25, AS SHOWN AND TO HOLD THE P.A. CABLE WRAP-UP TUBE ASSEMBLY, WGN102959, ON THE POLAR AXIS OF THE TELESCOPE. THIS IS TO BE WITH THE ADJUSTING SCREWS, 2150.180E107, WITHIN ± 1/16 OF CENTER LOCATION IN THE THREE SLOTS IN REAR INNER TUBE, WGE107850.
2. MATCH DRILL SOUTH BEARING SUPPORT ASSEMBLY, WGN102904, FOR 3/4-10UNC-2A THREAD 13 PLACES LOCATED FROM ITEM 25 FOR ITEM 28.
3. THE THREE ADJUSTING SCREWS, 2150.180B107, TO BE SET-UP WITH SUFFICIENT CLEARANCE TO THE REAR INNER TUBE SLOTS TO PERMIT AXIAL MOVEMENT OF THE CABLE WRAP-UP TUBE ASSEMBLY DURING HYDROSTATIC BEARING LIFT-OFF.

1215
1163

FIND NO.	PART NO.	DESCRIPTION	QTY	MATERIAL	CODE IDENT

LIST OF MATERIAL (LM)

LIMITS ON MACHINED DIMENSIONS EXCEPT AS NOTED
ANGLAR = ± 1° 0'
LINEAR:
.X = ± .1 .XXX = ± .010
.XX = ± .03 FRACTIONAL = ± 1/32
BREAK ALL SHARP EDGES
MATERIAL

DRAWN White 3-9-71
CHECK
ENGR

WESTERN GEAR CORPORATION
HEAVY MACHINERY DIVISION
EVERETT, WASHINGTON

POLAR AXIS ASSEMBLY

WGN102907
APPROVED

SIZE	CODE IDENT NO.		REV
E	16603	2150.201E002	I

SCALE 1/8 WT LB SHEET 2 OF 3