REVISIONS				
ZONE	LTR	DESCRIPTION	DATE	APPROVED
	A	REVISED PER A.U.R.A. APP PRINT	6/22/68	
	B	ADDED 8½ DIM	3/15/73	UDS

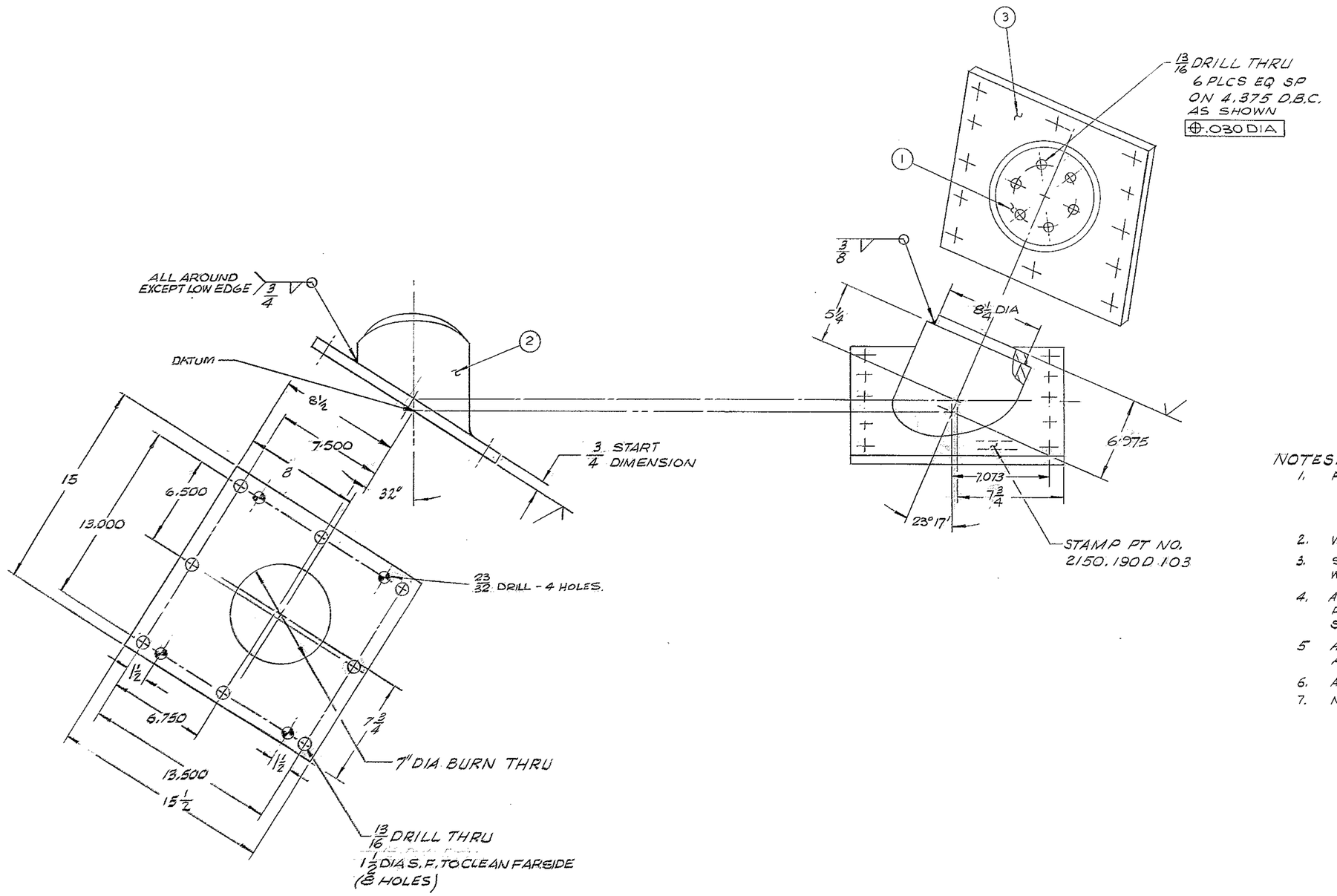

MATERIAL LIST				
PC.NO.	QT'Y	DESCRIPTION	MAT'L & SPEC	ROUGH WT
1	1	PL 8¼ DIA × 1" THK	ST'L ASTM A-36	·15
2	1	TBG 9" O.D. × ¾ W × 8½	ST'L AISI-MT1015	44
3	1	PL 15 × 1 × 15½	ST'L ASTM A-36	55

NOTES:

1. FABRICATION TOLERANCES EXCEPT AS NOTED
   UP TO 10 INCHES ± 1/16
   UP TO 50 INCHES ± 1/8
   50 INCHES & OVER ± 1/4
2. WELD PER W.G.C. SPEC 752, APPENDIX TI
3. STRESS RELIEVE AFTER WELDING & BEFORE MACHINING PER W.G.C SPEC 510.
4. APPLY ONE COAT OF PRIME PAINT ALL OVER PER W.G.C. SPEC 511 IMMEDIATELY AFTER STRESS RELIEVING & CLEANING.
5. ALL SURFACES MARKED √ TO BE 125√ EXCEPT AS NOTED.
6. ALL DIMENSION ARE IN INCHES.
7. MAGNAFLUX INSPECT ALL WELDS.

NEXT ASS'Y: 2150.190 C 102 (W.G.D 107,477)

FIND NO.	PART NO.	DESCRIPTION	QTY	MATERIAL	CODE IDENT

LIST OF MATERIAL (LM)

LIMITS ON MACHINED DIMENSIONS EXCEPT AS NOTED
ANGULAR = ± 1° 0'
LINEAR:
.X = ± .1 .XXX = ± .010
.XX = ± .03 FRACTIONAL = ± 1/32
BREAK ALL SHARP EDGES
MATERIAL
SEE MAT'L LIST

150 IN STELLAR TELESCOPE MOUNTING

DRAWN S. Barron 4-16-68
CHECK 4-26-73
ENGR

W.G.E 107723
APPROVED

western GEAR CORPORATION
HEAVY MACHINERY DIVISION
EVERETT, WASHINGTON

NORTH JACK BASE R.H.
BASE FRAME

SIZE	CODE IDENT NO.		REV
D	16603	2150.190 D 103	B

SCALE 1/4 WT 100 LB SHEET 1 OF 1

WESTERN GEAR CORPORATION
CONSTRUCTION PROJECTS DEPARTMENT
APPROVED FOR PROCUREMENT
DATE 6-22-68