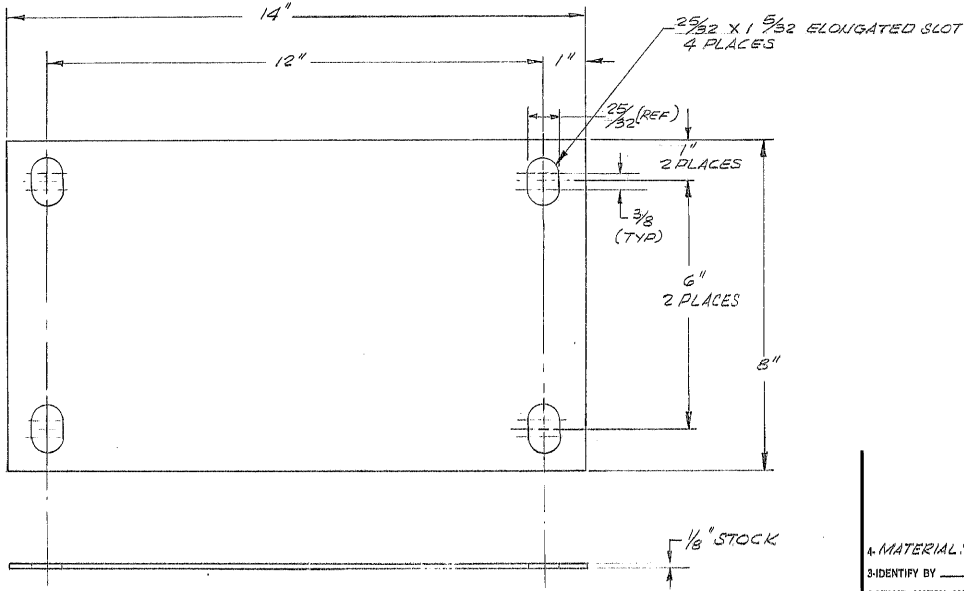

4-MATERIAL: ASTM A36 STEEL

3-IDENTIFY BY _____ AT LOCATION [3], "AURA INC. MADE IN U.S.A."

2-STAMP MATCH MARKS ON ALL MATING PARTS WHERE NECESSARY.

1-FOR NEXT ASSY. SEE 2150.180 E102

NOTES-

LET.	REVISION ON	ECR	DATE	BY

TOLERANCES UNLESS OTHERWISE NOTED:
DECIMAL DIMENSIONS
00.00 ± .010
00.000 ± .005
FRACTIONAL DIMENSIONS
UP TO 10" ± 1/64
10" TO 50" ± 1/32
50" & OVER ± 1/16
BREAK SHARP EDGES
ALL SURFACES TO HAVE 125√ FINISH UNLESS OTHERWISE NOTED.

DES'D BY	E.D.	DATE	
DRN BY	[illegible]	DATE	5-2-70
CHK'D BY	[illegible]	DATE	5-6-70
APP'D BY	F. Hundley	DATE	5-16-70
APP'D BY	K.K. Kimball	DATE	5-16-70
APP'D BY		DATE	

KITT PEAK NATIONAL OBSERVATORY
OPERATED BY THE
ASSOCIATION OF UNIVERSITIES FOR RESEARCH IN ASTRONOMY, INC.
UNDER CONTRACT WITH
NATIONAL SCIENCE FOUNDATION

.150" STELLAR TELESCOPE

REF. FILE 1161

NAME: SHIM R.A. CABLE WRAP-UP SUPPORT ASSY

SCALE 1/2

PRINT ISSUED

DRAWING NUMBER: 2150.180 B/108

REV.

2/70 DIETERICH-POST CLEARPRINT 1020