BILL OF MATERIAL

ITEM	QTY.	MATERIAL	DESCRIPTION	WEIGHT
1	1	HRS	3/4 PL X 11 X 19	
2	1	HRS	3/4 PL X 8 X 17 1/2	
3	1	HRS	3/4 PL X 4 5/16 X 7 3/16	
4	2	HRS	3/4 PL X 4 7/8 X 8 1/2	

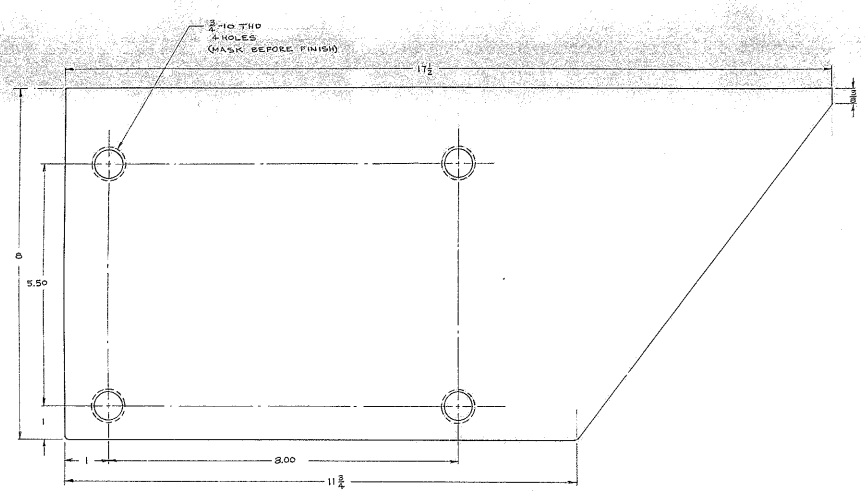

PLAN VIEW OF ITEM 2

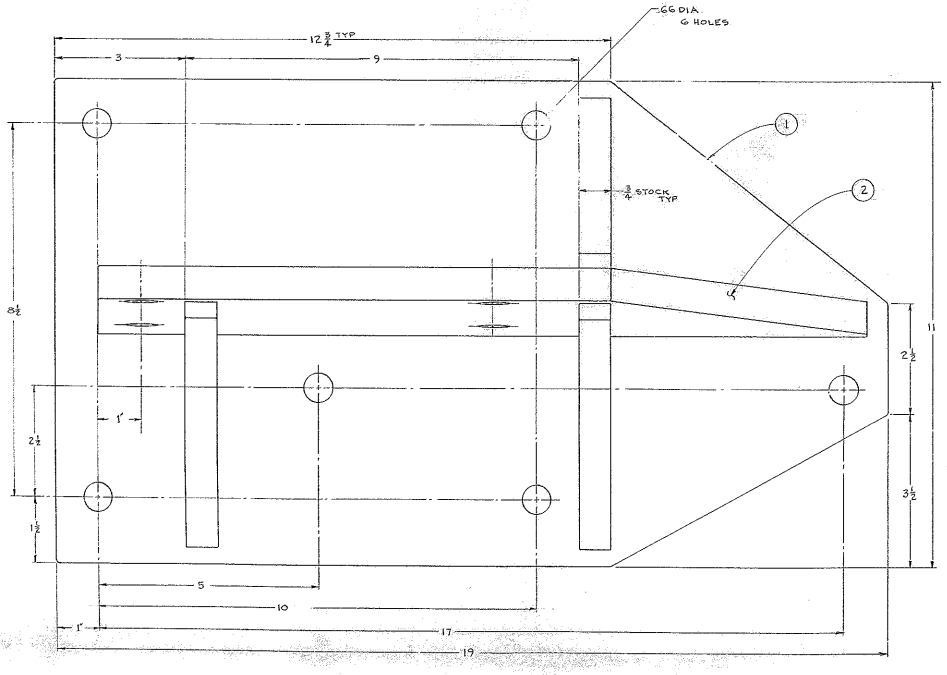

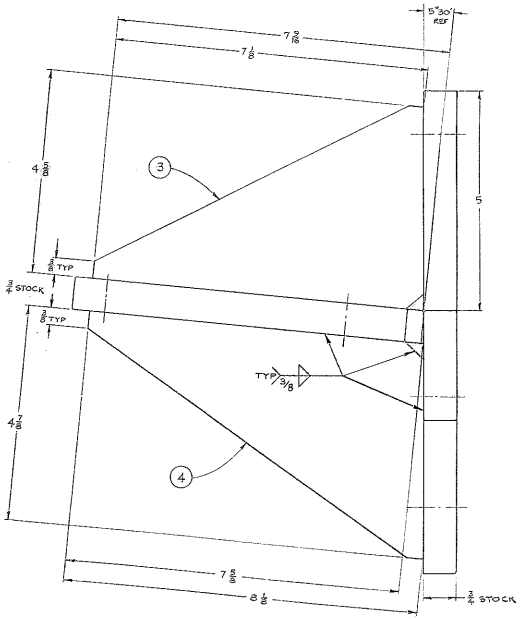

NOTES:
1. FINISH: SAND BLAST & PRIME PAINT PER AURA SPEC NO 9001-A1-1 (EXCEPTIONS NOTED)
2. ALL CUTS 250
3. ALL FRACTIONAL DIM ± 1/16

FOR ASSEMBLY SEE 2120-E147

LET.	REVISION	ECR	DATE	BY

TOLERANCES UNLESS OTHERWISE NOTED
DECIMAL DIMENSIONS
00.00 ± .010
00.000 ± .003
FRACTIONAL DIMENSIONS
UP TO 12" ± 1/64
OVER 12" ± 1/32
12" & OVER ± 1/16
BREAK SHARP EDGES 1/32
ALL SURFACES 125 TO HAVE ✓ FINISH UNLESS OTHERWISE NOTED.

KITT PEAK NATIONAL OBSERVATORY
OPERATED BY THE ASSOCIATION OF UNIVERSITIES FOR RESEARCH IN ASTRONOMY, INC. UNDER CONTRACT WITH NATIONAL SCIENCE FOUNDATION

150 INCH STELLAR TELESCOPE		REF FILE 1157	
NAME ANGLE BRACKET, BASE FRAME-HORSESHOE STAY BAR		SCALE FULL	
		PRINT SIZE/25	
DESIGNED BY S.D. Lewis DATE 7-7-71	APPROVED BY [illegible] DATE 7-7-71	DRAWING NUMBER 2150.140-E103	REV.
DRAWN BY [illegible] DATE 7-7-71	APPROVED BY [illegible] DATE 7-7-71		
CHECKED BY [illegible] DATE 7-7-71	APPROVED BY [illegible] DATE 7-25-71		