REVISIONS				
ZONE	LTR	DESCRIPTION	DATE	APPROVED
	A	REVISED PER AURA APPR CONST. PRINT DATED 4-24-68		
3-E	B	1/4 TYP WAS 3/8 TYP	12-10-69	
	C	DWG NO. WAS 2150.130E010 REVISED "AS BUILT"	3/24/71	JW
	D	ADDED THRUST PAD BABBIT REINF. DETAIL & SECT. E-E	1/20/71	JW
	E	ADDED 3/4-10NC HOLES 5 3/4 WAS 5 3/4	2/1/72	JB

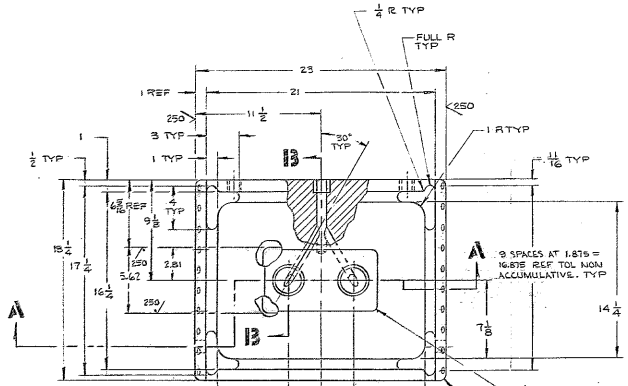

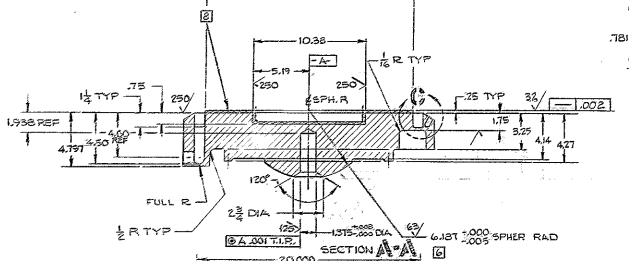

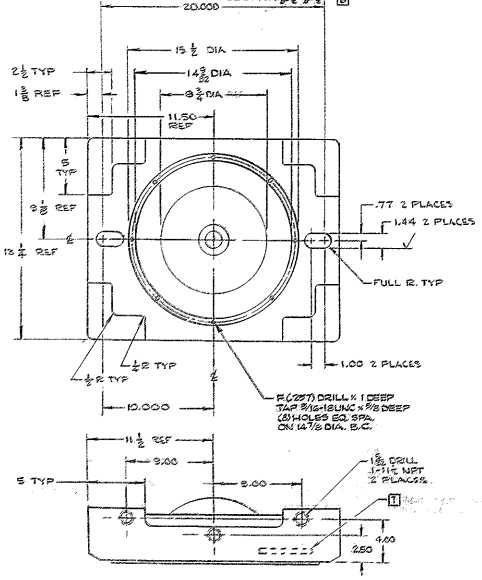

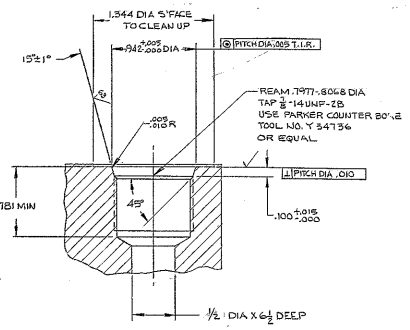

DETAIL D
SCALE 2/1

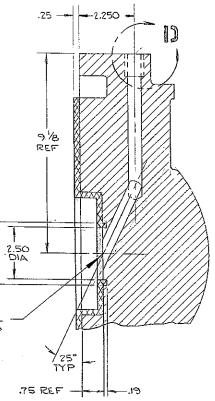

SECTION B-B
SCALE 1/2

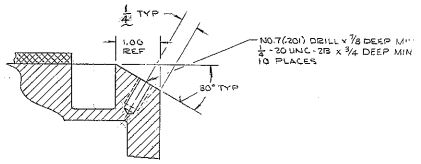

DETAIL C
SCALE 1/1
2 PLACES

NOTES:

1. ALL DIMENSIONS ARE IN INCHES.
2. CASTING TOLERANCE: ± 1/8 EXCEPT AS SPECIFIED
   FILLET RADII: 1/8 EXCEPT AS SPECIFIED
   CORNER RADII: 1/8 EXCEPT AS SPECIFIED
   DRAFT ANGLE: 1° MAX
3. PATTERNMAKER TO ALLOW MATERIAL FOR MACHINING AT ALL SURFACES MARKED √.
4. PATTERN NO. TO BE 2150.130E010.
5. ALL SURFACES MARKED √ TO BE 125 √ EXCEPT AS SPECIFIED.
6. MATCH LAP & MARK 63 √ SPHERICAL SURFACE FOR 75% MIN CONTACT AREA WITH THE SPHERICAL SURFACE OF THE SHAFT (DWG. 2150.130D011) RECORD BY SKETCH OR PHOTOGRAPH
7. CAST PART NO. 2150.130E010, CHARACTERS 1/4 HIGH, RAISED .03.
8. BABBIT ALLOY: NO. 2 ASTM B-23-66, TIN 89%, ANTIMONY 7.5% AND COPPER 3.5% OR EQUIV.
9. APPLY ONE COAT OF PRIME PAINT ALL OVER PER W.G.C. SPEC. S11 BEFORE MACHINING
10. RADIOGRAPHIC INSPECT PER ASTM E186 CLASS 3

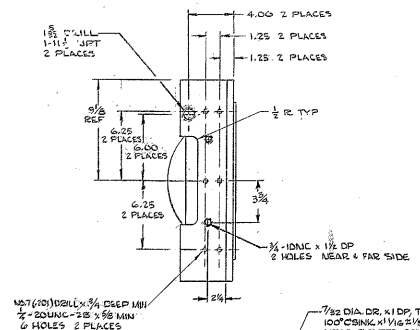

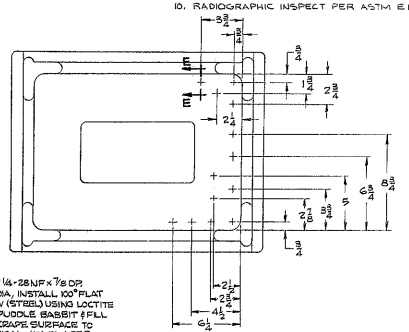

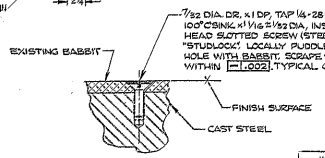

SECTION E-E
SCALE 1/1

THRUST PAD BABBIT REINFORCEMENT
S/NG KPNO ONLY - AS BUILT

1158

2150.130E102 (WGN102917)
NEXT ASSY: 2150.130E202 (WGN102918)

FIND NO.	PART NO.	DESCRIPTION	QTY	MATERIAL	CODE IDENT
		LIST OF MATERIAL (LM)			

WESTERN GEAR CORPORATION
CONSTRUCTION PROJECTS DEPARTMENT
APPROVED FOR PROCUREMENT
DATE APR 29 1968

LIMITS ON MACHINED DIMENSIONS EXCEPT AS NOTED ANGULAR = ± 1° 0' LINEAR: X = ± .1 XXX = ± .010 XX = ± .03 FRACTIONAL = ± 1/32 BREAK ALL SHARP EDGES	150 MM STELLAR TELESCOPE MOUNTING	WESTERN GEAR CORPORATION — HEAVY MACHINERY DIVISION EVERETT, WASHINGTON
MATERIAL ASTM A352-60T GRADE LC-2 NORMALIZE & TEMPER	DRAWN E. LAVIN 2-21-68; CHECK W. Mulcahy 2-21-68; ENGR	KPNO-PAD BEARING HYDROSTATIC THRUST BEARING
	WGN102969 APPROVED	SIZE E; CODE IDENT NO. 16603; 2150.130E010; REV E; SCALE 1/4; WT; LB; SHEET; OF