| REVISIONS | | | | | |
|---|---|---|---|---|---|
| ZONE | LTR | DESCRIPTION | DATE | APPROVED | |
| | A | REVISED PER AURA APPR. CONST. PRINT DATED 4-24-68 | | | |
| 4H | B | 3/32 FOR 1/2 DOWEL WAS 3/32 FOR 1/2 DOWEL | 7/24/68 | | |
| D8 | C | 1 3/8 DIM WAS 1" | 8/28/68 | GE | |
| G2 | C | ITEM 11 16 1/2 x 47 1/4 WAS 16 3/4 x 1 1/2 x 47 1/4 | 10/10/68 | GE | |
| D7 | C | ADDED 7/8 DIM - 1/2 DELETED | " | GE | |
| D1 | C | ADDED "APP 71" TO LINE 2 | " | GE | |
| G5 | D | ADDED 2 HOLES & 1 1/4 LOC. DIM | 11/1/70 | DS | |
| C3 | | ADDED VIEW D-D | | | |
| 3F | E | FOCDED TOL. TO 8TH DIM SEE ECR 1022 | 8/16/79 | LDS | |
| 3C | | ADDED SIX HOLES TO VIEW "D-D" | | | |
| 4A | | ADDED SECTION "E-E" | | | |
| 6A | | ADDED SIDE VIEW & BORDER HOLES | | | |

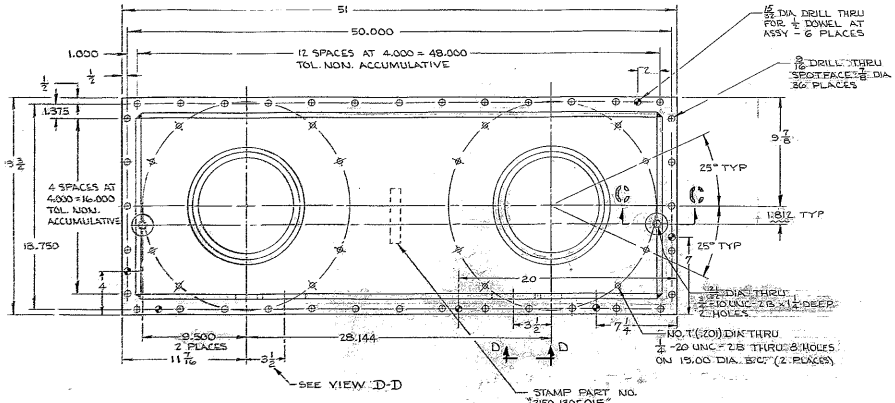


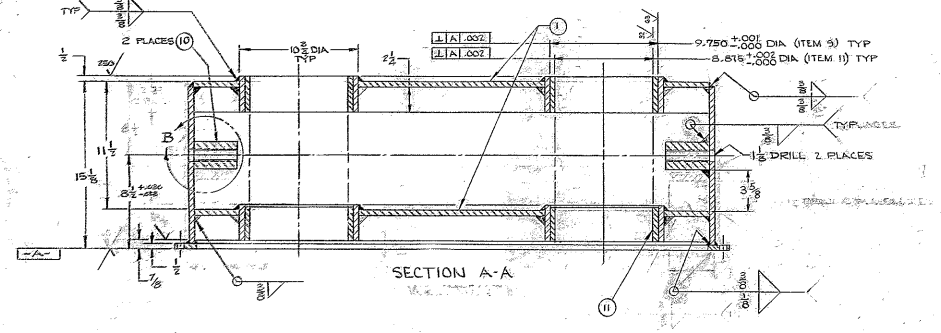


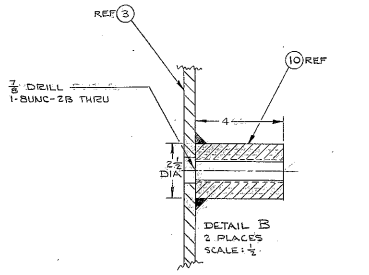


| MATERIAL LIST | | | | |
|---|---|---|---|---|
| PC. NO. | QTY | DESCRIPTION | MATL. & SPEC. | ROUGH WT. |
| 1 | 2 | PL 16 x 1/2 x 47 1/4 | ASTM A36 | 214 |
| 2 | 2 | PL 14 1/2 x 1/2 x 47 1/4 | | 136 |
| 3 | 2 | PL 14 1/2 x 1/2 x 16 1/4 | | 68 |
| 4 | 2 | PL 2 x 3/4 x 51 | | 29 |
| 5 | 2 | PL 2 x 3/4 x 15 3/4 | | 9 |
| 6 | 8 | PL 2 1/4 x 1/2 x 2 5/8 | | 7 |
| 7 | 2 | PL 2 1/4 x 1/2 x 17 5/8 | | 11 |
| 8 | 4 | PL 2 1/4 x 1/2 x 4 3/16 | ASTM A36 | 5 |
| 9 | 4 | TUBE, 10 3/4 O.D. x .365 WALL x 3 7/8 LG. | STL. AISI 1015 | 62 |
| 10 | 2 | BAR 2 1/2 DIA x 4 | STL. AISI 1020 | 9 |
| 11 | 4 | 2150.130C004 | BEARING SAE 660 BRONZE | 25 |
| 12 | | | | |
| 13 | 2 | BAR 2" DIA x 1 1/2 LG. | STL AISI 1020 | 2 |
| | | TOTAL ROUGH WT. | | 637 |

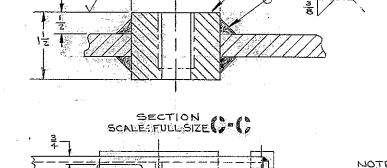


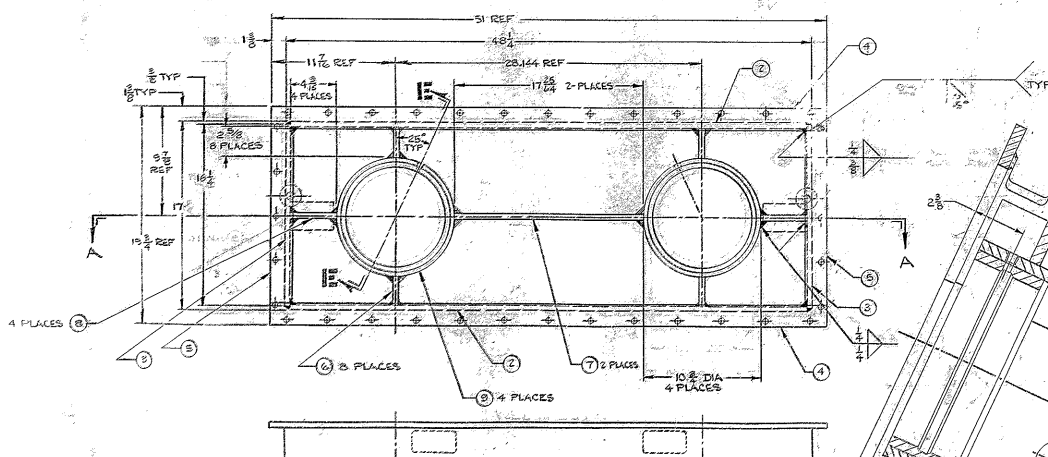


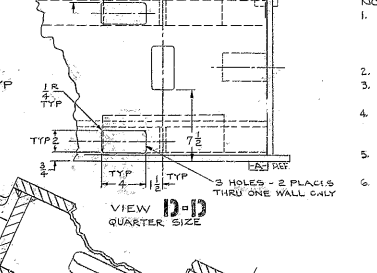


NOTES:

1. FABRICATION TOLERANCE EXCEPT AS NOTED
   a. UP TO 10 INCHES ± 1/16
   b. 10 TO 50 INCHES ± 1/8
   c. 50 & OVER ± 1/4
2. WELD PER W.G.C. SPECIFICATION 752 APPENDIX T1
3. STRESS RELIEVE AFTER WELDING & BEFORE MACHINING PER W.G.C. SPECIFICATION 510.
4. APPLY ONE COAT OF PRIME PAINT ALL OVER PER W.G.C. SPECIFICATION 511 IMMEDIATELY AFTER STRESS RELIEVING & CLEANING.
5. ALL SURFACES MARKED √ TO BE 125 √ FINISH EXCEPT AS NOTED.
6. ALL DIMENSIONS ARE IN INCHES.

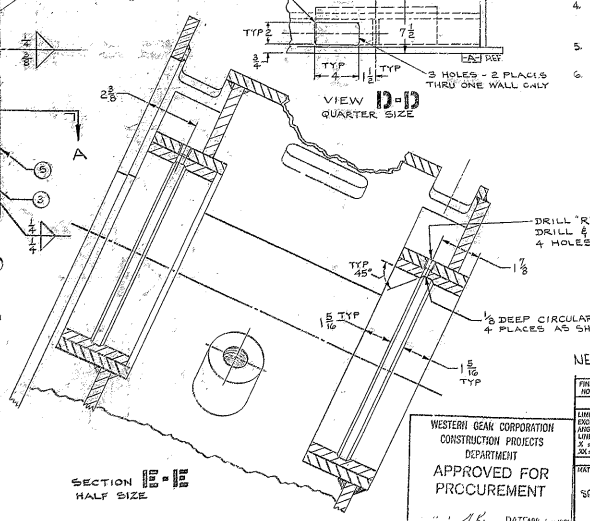


NEXT ASSY 2150.130E102 (WGN102 917) 2150.130E202 (WGN102 918)

REF FIL. 1156

| FIND NO. | PART NO. | DESCRIPTION | QTY | MATERIAL | CODE IDENT |
|---|---|---|---|---|---|
| | | LIST OF MATERIAL (LM) | | | |

LIMITS ON MACHINED DIMENSIONS EXCEPT AS NOTED
ANGULAR ±± ± 1°0'
LINEAR:
X ±± ± .1 XXX ±± ± .010
XX ±± ± .03 FRACTIONAL ±± ± 1/32
BREAK ALL SHARP EDGES
MATERIAL
SEE MATL LIST

150 lb STELLAR TELESCOPE MOUNTING

DRAWN G. LAVIN 2-15-68
CHECKED 3-1-68
ENGR
APPROVED

western GEAR CORPORATION
HEAVY MACHINERY DIVISION
EVERETT, WASHINGTON

HOUSING
HYDROSTATIC THRUST BEARING

WGN102 L 916

SIZE E CODE IDENT NO. 16603 2150.130E015 REV

SCALE 1/4 WT 375 LB SHEET OF

WESTERN GEAR CORPORATION
CONSTRUCTION PROJECTS DEPARTMENT
APPROVED FOR PROCUREMENT
DATE APR 2 1968